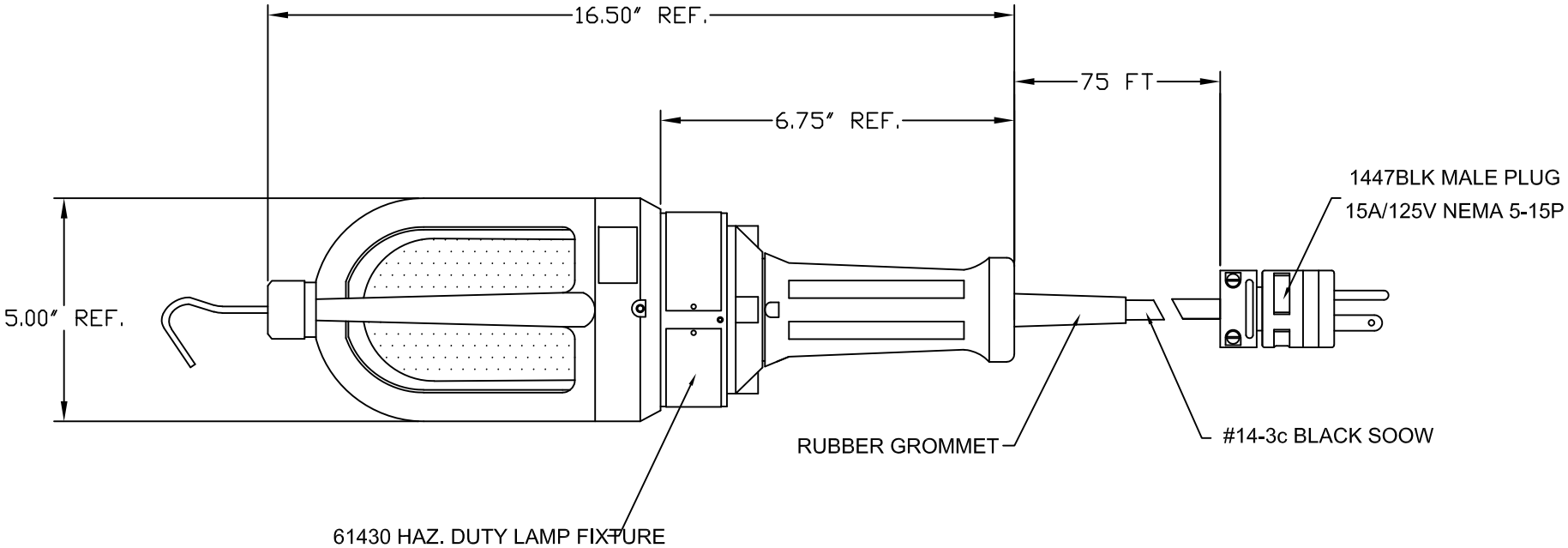

REFERENCE USE ONLY

SPECIFICATIONS:

NO SWITCH

UL TEMPERATURE RATING: T3B

ELECTRICAL RATING: 125V (MAX.)

CORD: 75 FEET #14-3c SOOW

HAZARD DUTY RATING:

- CLASS I, DIV I, GROUP C & D (100W MAX.)
- CLASS II, DIV I, GROUP F & G (75W MAX.)
- CLASS I, ZONE 1, GROUP IIB

BULB TYPE: A21 100W INCANDESCENT (BULB IS INCLUDED)

GENERAL TOLERANCES (UNLESS SPECIFIED)			DIMENSION STYLE	SCALE	DESIGN UNITS / THIRD ANGLE PROJECTION
	mm	INCH	DRAWN BY KA DATE 3-2-2017	TITLE 08188 61430 HAZ. DUTY LAMP FIXTURE W/75' #14-3c BLK CORD&1447 PLUG	
4 PLACES			CHECKED BY DATE		
3 PLACES					
2 PLACES			APPROVED BY DATE	molex MOLEX LLC.	
1 PLACE					
DRAFT WHERE APPLICABLE MUST REMAIN WITHIN DIMENSIONS			MATERIAL NO. 1301040017	DOCUMENT 08188	SHEET NO. 1 OF 1
			SIZE C	THIS DRAWING CONTAINS INFORMATION THAT IS PROPRIETARY TO MOLEX INCORPORATED AND SHOULD NOT BE USED WITHOUT WRITTEN PERMISSION	

DESCRIPTION

REV