VAPORMASTER® 3.5 CU. FT. ABRASIVE BLASTING POT

PART NUMBERS AND SCHEMATICS GUIDE

Company Profile

Since 1944, Marco has developed a strong tradition of providing innovative and reliable products and services to the surface preparation and protective coatings industries. We are the world's premier provider of Abrasives, Blasting, Coating, Dust Collectors, Engineered Systems, Rental, Safety, Service, Repair, & Modernization, and Vacuums.

Through innovative designs and a total commitment to quality, Marco manufactures products that increase production rates, create a safer workplace, and reduce maintenance costs. Marco's industry experience, manufacturing capabilities, legendary customer service, product availability, logistics services, and technology leadership is your assurance that we deliver high quality products and services, providing the best value to you, our customer.

The Marco Difference

- **Industry Experience** – With Marco on your team, you have access to expertise which can only come from decades of industry leadership. We have organized our engineering department, production specialists, customer operations, and safety support into a "Center of Competence." As a Marco customer, you have access to hundreds of years of cumulative experience related to your operations.
- **Manufacturing Excellence** – Marco is a U.S. based, ISO 9001:2008 certified manufacturer of equipment for the Surface Preparation and Protective Coatings industries. Marco's engineers benchmark the industry to ensure that we design and manufacture superior products that set the "Gold Standard" for performance, safety, and quality.
- **Legendary Customer Service** – Marco's legendary customer service team is staffed by friendly, highly-trained individuals who are focused on providing the highest level of product support, order accuracy, and customer satisfaction.
- **Product Availability** – We stock over 10,000 SKU's and have more than 45 shipping locations to serve North American and International markets for all major brands of blasting and coating equipment. As the largest provider of surface preparation and protective coatings equipment in the world, our inventory levels and product availability are unmatched.
- **Logistics Services** – Marco's in-house logistics team is dedicated to moving your shipment anywhere in the world. We move more than 14,000 truckloads every year, allowing you to save on freight costs by leveraging our buying power. Lower your process costs with a single invoice, which includes product and freight.
- **Technology Leadership** – Our website provides: Operator's Manuals, Part Numbers and Schematics Guides, SDS information, and Features & Specifications Guides, providing access to information 24/7. Our Extranet application allows you to receive quotes and place orders online. Our Intranet maintains a complete record of your purchase history to assist with ongoing support of your existing equipment and future purchasing decisions.

Vision Statement

Marco is the world's premier provider of Abrasives, Blasting, Coating, Dust Collectors, Engineered Systems, Rental, Safety, Service, Repair, & Modernization, and Vacuums.

Mission Statement

Marco provides strong leadership and innovation to the surface preparation and protective coatings industries. We dedicate our efforts to the continuous improvement of our products, services, processes, people, and most importantly, the quality of our customer's experience.

Quality Statement

Marco is committed to providing superior quality in the design, manufacturing, distribution, rental, service, and repair of our products. Our ISO 9001:2008 certification extends throughout all operations in all locations. Continuous improvement of our processes and supply chain Integration comprise the core of our business strategy for delivering exceptional quality and value in all Marco products and services.

Management Philosophy

We are a company dedicated to the success of every customer and associate. We discuss, debate, challenge, measure, and test our ideas. We will be boundless and limitless in our passion to improve. Through sound leadership and dedicated associates, we will ensure a long term, profitable future for Marco, our associates, customers, and suppliers.

TABLE OF CONTENTS

Company Profile **1**

Part Numbers and Schematics Guide **3**

Inspection Door Assembly **5**

Pop-up Assembly **6**

Vapormaster® 3.5 Cu. Ft. Abrasive Blasting Pot **7**

Control Box - Primary Components **9**

Control Box - Sub Components **11**

Control Box - Outer Components - Front and Rear **13**

Control Box - Outer Components - Right Side **15**

1/2” Water Lines Schematic **16**

Control Box - 1/4” Air Lines Schematic. **17**

Control Box - 4mm Air Lines Schematic. **19**

Control Box - 1/2” Air Lines Schematic. **21**

Control Box - Electrical Lines Schematic **22**

Optional Accessories **23**

PART NUMBERS AND SCHEMATICS GUIDE

	BLASTMASTER® 3.5 CU. FT. WET ABRASIVE BLASTING POT			
Part Numbers	**Blastmaster® Remote Control Switch**	**Blast Nozzle**	**1/1/4" Super-Flex Blast Hose** *(Includes remote control switch, coupled hose, and remote control line)*	**3.5 Cu. Ft. Abrasive Blasting Pot**
10106799	–	–	–	x
10106956	150P	#8 XL - Tungsten Carbide Liner	50'	x
10106957	151E	#8 XL - Tungsten Carbide Liner	50'	x

PART NUMBERS AND SCHEMATICS GUIDE

PART NUMBERS AND SCHEMATICS GUIDE

Figure 1: Inspection Door Assembly

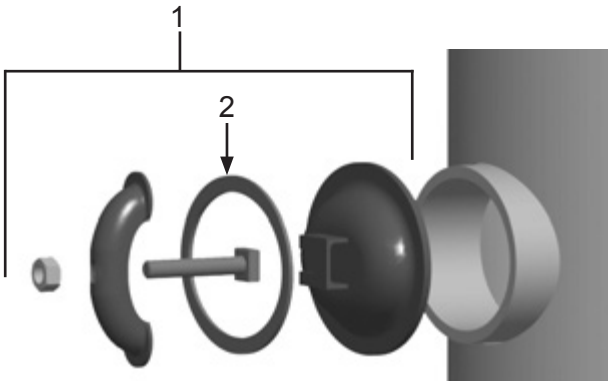

Item #	Part #	Description
Fig. 1		
1	1006200	6" x 8" Inspection Door Assembly
2	1006201	Gasket

PART NUMBERS AND SCHEMATICS GUIDE

Figure 2: Pop-up Assembly

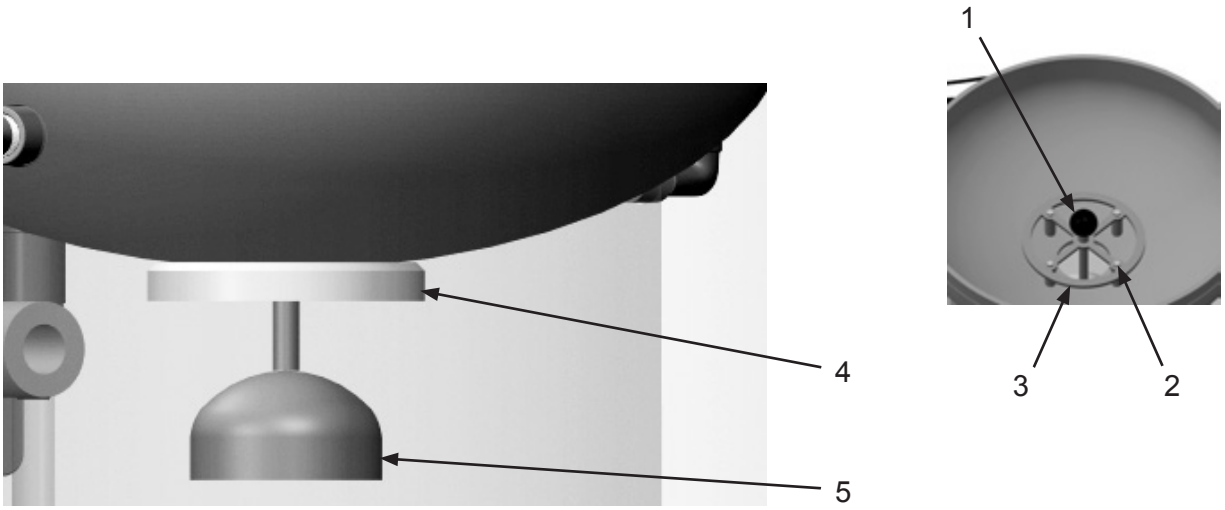

Item #	Part #	Description
Fig. 2		
1	10105722	Knob
2	20100959	1/4-20 x 5/8" Bolt
3	10105346	Pop-Up Spindle
4	1006040	Valve Seat
5	10105720	Pop-Up

PART NUMBERS AND SCHEMATICS GUIDE

Vapormaster® 3.5 Cu. Ft. Abrasive Blasting Pot

Item #	Part #	Description
Fig. 3		
—	**10106799**	**3.5 Cu. Ft. Abrasive Blasting Pot Assembly**
1	10106808	1" Tube x 3/4" Male Garden Hose Connector
2	10106546	Hose Clamp 11/16"–1-1/4"
3	10106800	3.5 Cu. Ft. Blast Pot
4	10106171	ASME Pressure Relief Valve
5	10106139	Blast Enclosure – Complete
6	10105685	1/2" Nylon Tubing – Black
7	10106143	1-1/4" Clear PVC Tubing
8	10106195	1-1/2" Male NPT x Male Adapter *(Two Required)*
9	10106192	1-1/2" Cam and Groove Nipple *(Two Required)*
10	10106144	3/4" Clear PVC Tubing
11	10106983	1-1/2" Material Handling Hose – 600 PSI *(per foot)*
12	10105901	1" PVC Hose Barb *(Three Required)*
13	1011801	1" Street Elbow – Galvanized
14	10105672	3/4" Street Elbow *(Two Required)*
15	10106145	1" Reinforced PVC Tubing
16	10106194	1-1/2" 45C Elbow
17	10106197	1-1/2" Socket x Notched Shank
18	10106134	1-1/2" Ball Valve
19	10AHCL1	Band Clamp
20	10104234	3/8-16 x 1-1/4 Hex Bolt Zinc *(Eight Required)*
21	10102331	3/8 SAE Flat Washer Zinc *(16 Required)*
22	10101936	3/8" Lock Washer – Zinc *(Eight Required)*
23	20100138	3/8-16 Hex Lock Nut Zinc *(Eight Required)*
24	10103396	Hose Clamp – 1-1/16" – 2"
25	10105637	1/4" NPT x 1/2" Elbow
26	10105695	1/2" NPT Elbow *(Three Required)*
27	10106196	1-1/2" Socket x Male NPT
28	10106334	1/4" Tube x 10-32 UNF 90° Elbow

Item #	Part #	Description
29	10105688	1/4" NPT Elbow
30	10105683	1/4" Nylon Tubing
31	10105671	3/4" Close Nipple
32	10105700	1/4" Bulkhead Union
33	10105701	1/2" Bulkhead Union
34	10105714	1/8" M NPTF Hollow Hex Plug
35	10105709	1/8" NPT (F) Bulkhead
36	10105622	1/4" Mini Brass Ball Valve
37	10105606	1-1/4" Street Elbow
38	10105618	1-1/4" Ball Valve
39	10106135	1-1/4" Hose Barb
40	10105602	Close Nipple – 1-1/4"
41	10105674	3/4" Male Hose Barb
42	10105673	3/4" Ball Valve
43	10105675	1/2" Street Elbow
—	106M145	Part Numbers & Schematics Guide – Vapormaster® 3.5 Cu. Ft. Abrasive Blasting Pot
—	1090145	Operators Manual – Vapormaster® 3.5 Cu. Ft. Abrasive Blasting Pot

PART NUMBERS AND SCHEMATICS GUIDE

Figure 3: Vapormaster® 3.5 Cu. Ft. Abrasive Blasting Pot

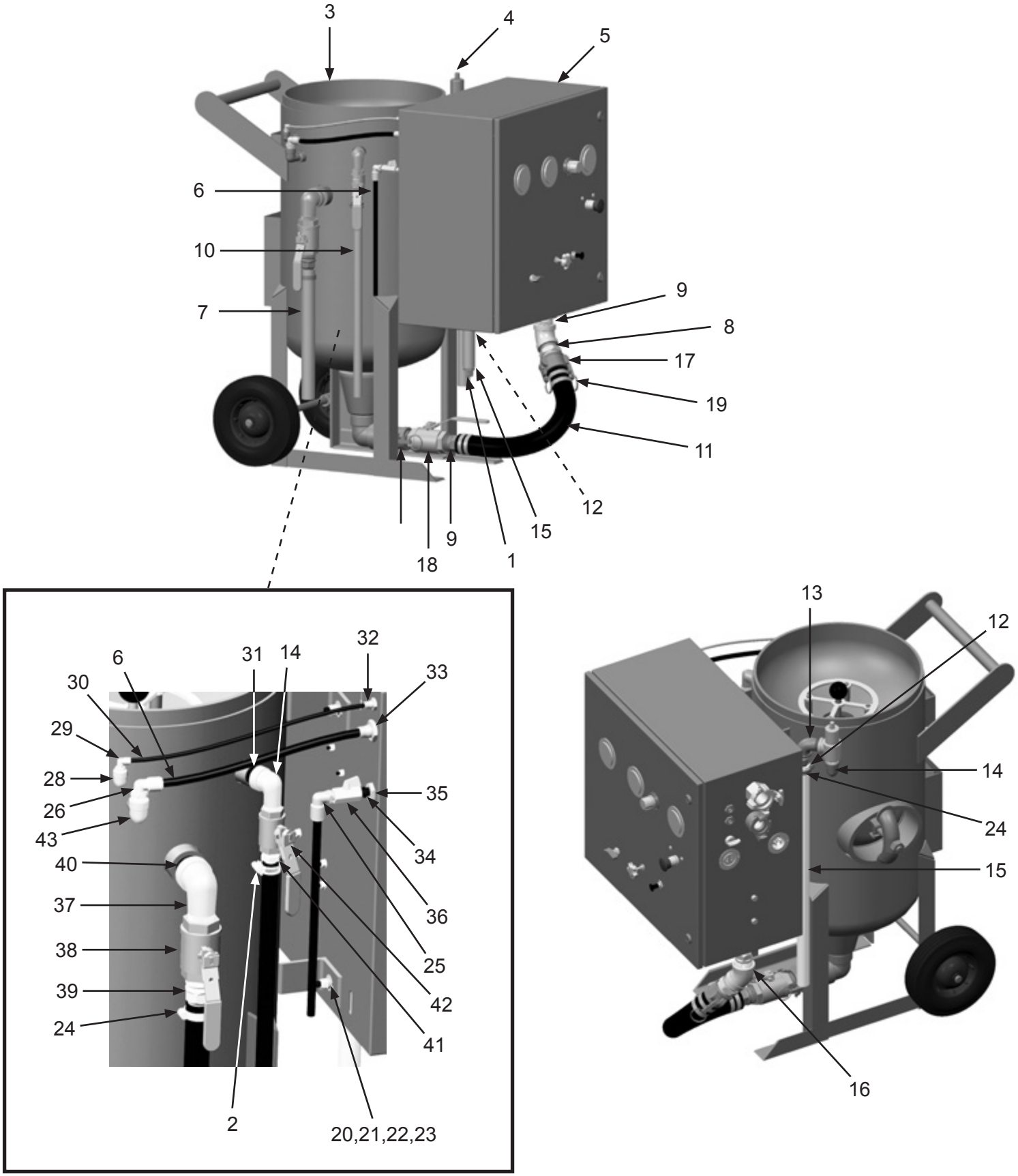

PART NUMBERS AND SCHEMATICS GUIDE

Control Box - Primary Components

Item #	Part #	Description
Fig. 4		
1	10PV400	Blastmaster® PV400 Remote Control Valve
2	10105624	Diaphragm Pump
3	10105623	5:1 Pump
4	10103400	3/8-16 x 3/4” Bolt
5	10101936	3/8” Lock Washer - Zinc
6	20100125	1/4-20 x 3/4” Zinc Hex Bolt
7	1012323	1/4-20 Zinc Lock Nut With Nylon Insert
8	1014017	1/4” Flat Washer
9	1012154	1/4-20 x 1” Hex Bolt
—	106M009	Part Numbers & Schematics Guide – Blastmaster® PV400 Remote Control Valve
—	1090009	Operator's Manual – Blastmaster® PV400 Remote Control Valve

Figure 4: Control Box - Primary Components

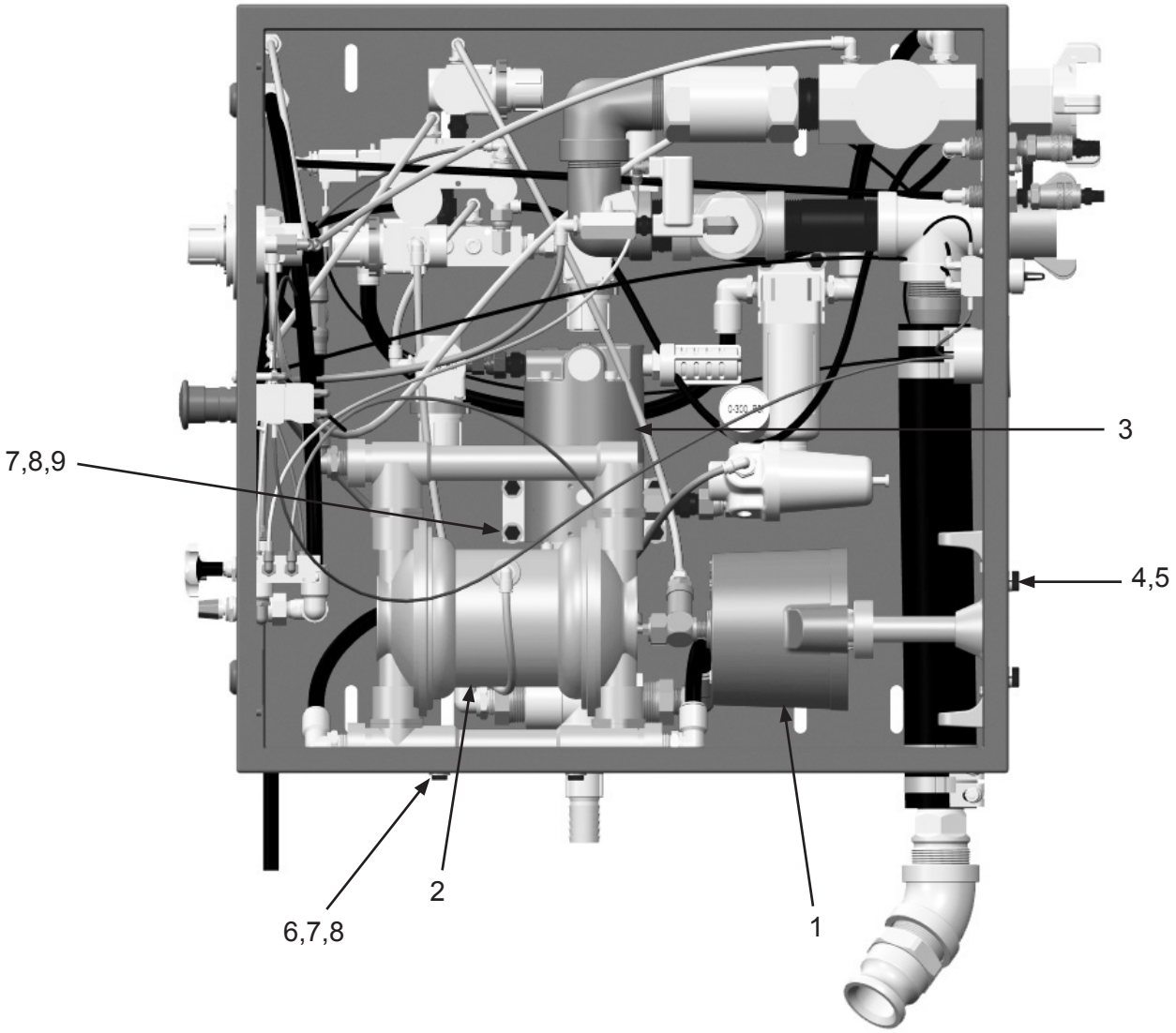

PART NUMBERS AND SCHEMATICS GUIDE

Control Box - Sub Components

Item #	Part #	Description
Fig. 5		
1	10105688	1/4” Elbow *(Nine Req.)*
2	10105588	Regulator *(Three Req.)*
3	10105628	Pressure Gauge
4	10105593	Wash Down Switch
5	10105932	2-Way Valve
6	10105691	1/8” Elbow *(Two Req.)*
7	10105687	1/8” Elbow
8	10105716	1/4” x 1/8” Hex Nipple
9	10105935	1/4” 90° Street Elbow
10	10105692	1/4” NPT Elbow (M) *(Two Req.)*
11	10103292	1/4” Needle Valve
12	1012326	1/4” x 1/4” 90° Swivel
13	1017019	Hex Nipple 1/4” x 1/4” *(Two Req.)*
14	10105711	3/8” (M) x 1/4” (F) Hex Reducer Bushing
15	10105694	3/8” Elbow
16	10105635	Manifold
17	10105906	1/4” (M) x 1/4” (M) Check Valve
18	10106334	1/4” Elbow
19	10105626	1/4” Valve 12-Volt DC
20	1012113	1/8” Elbow *(Two Req.)*
21	20100125	1/4-20 x 3/4” Hex Bolt *(Six Required)*
22	1014017	1/4” Flat Washer *(20 Req.)*
23	1012323	1/4-20 Lock Nut *(10 Req.)*
24	10105637	1/4” x 1/2” Elbow *(Two Req.)*
25	10105625	Lubricating Air Filter
26	10105965	Airline Filter Bracket
27	20PFHA60UA0606	3/8” (M) x 3/8” (F) 90° Swivel
28	10107408	Adapter
29	10105611	1-1/4” x 3” Pipe Nipple
30	10105695	1/2” x 1/2” Tube Elbow
31	10105900	1” x 1/2” PVC Reducer *(Two Req.)*
32	10105899	1” PVC Cross
33	10105898	1” x 1” Close Nipple
34	10105901	1” Hose Barb
35	10105706	1/2” Connector
36	1012154	1/4-20 x 1” Hex Bolt *(Four Req.)*
37	10105606	1-1/4” Elbow *(Two Req.)*
38	10105605	1-1/4” Check Valve
39	10105602	1-1/4” Close Nipple *(Four Req.)*
40	10105603	Regulator
41	10105609	1-1/4” Tee *(Two Req.)*
42	10107222	1-1/4”NPT x 1-1/2” Hose Barb
43	10106983	Hose - 1-1/2”
44	10105608	1-1/4” x 1/4” Bushing
45	10105621	1/4” Air Valve
46	20PFHA25UA0404	1/4” 90° Elbow
47	10105688	1/4” Connector
48	10105707	Pilot Check Valve
49	10105695	3/8” x 1/2” Tube Elbow *(Three Req.)*
50	10105622	1/4” Brass Ball Valve
51	10105979	1-1/4” Lock Nut *(Two Req.)*
52	10103738	T-Bolt Clamp *(Four Req.)*
53	10SME025	1/4” NPT X 1/4” F Straight Swivel
54	10105689	3/8” Elbow
55	10106766	3/8” x 1/4” Hex Nipple
56	1028610	3/8” Hex Nipple
57	10106765	3/8” 75-200 PSI Regulator
58	10105627	Pressure Gauge 0-200 psi *(Four Req.)*
59	10106394	Parker Valve Endcap
60	10105711	Bushing
61	1011212	Bushing
62	10105703	1/4" M NPT Connector

Figure 5: Control Box - Sub Components

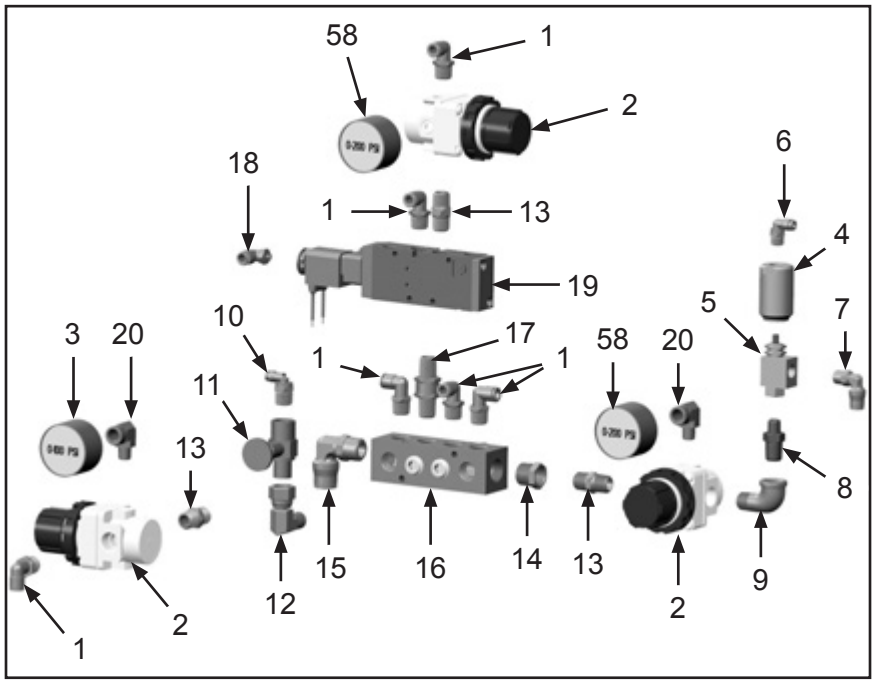

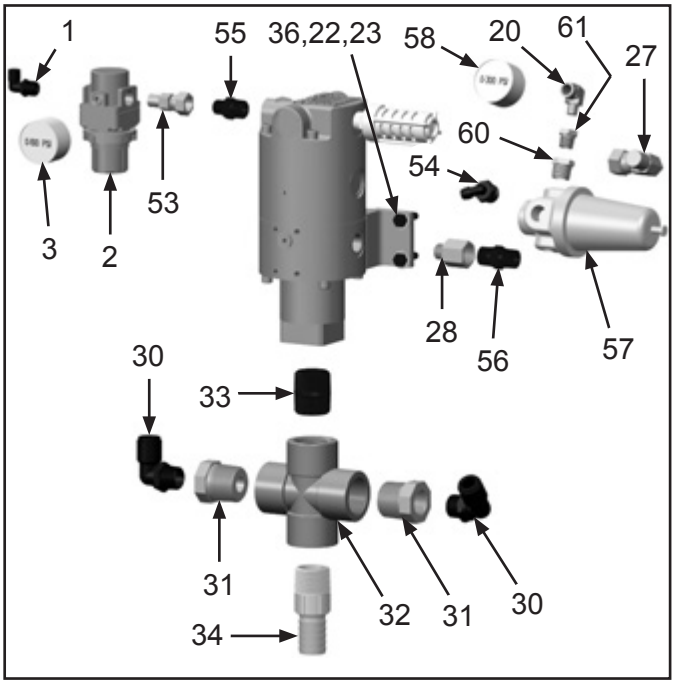

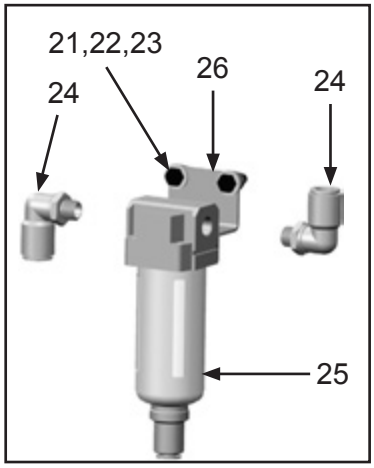

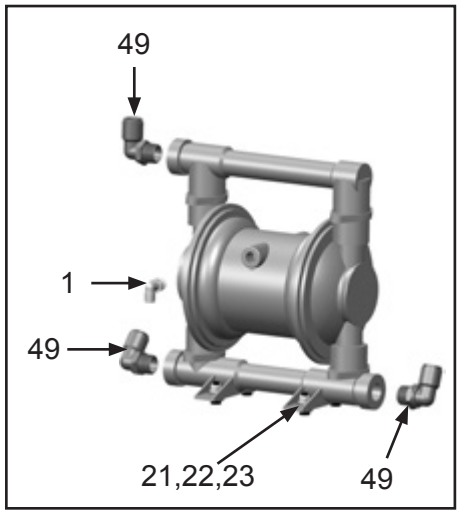

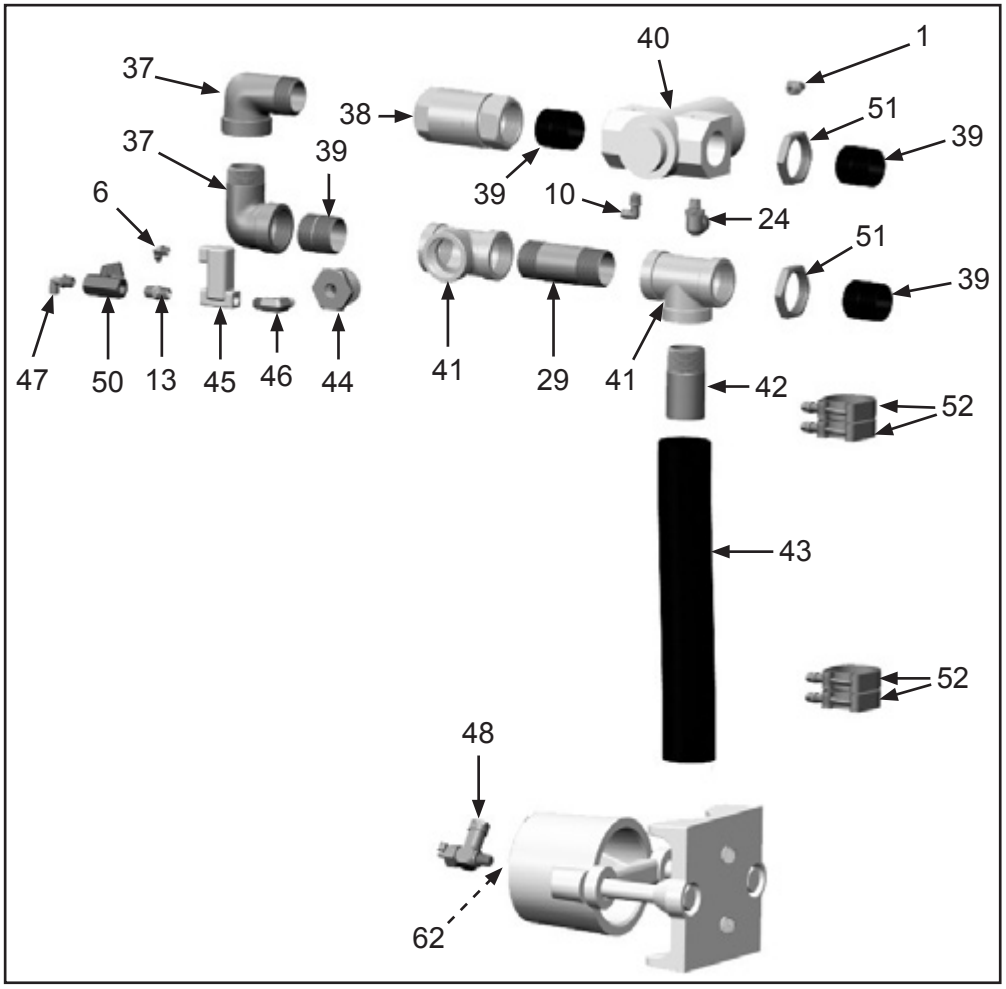

PART NUMBERS AND SCHEMATICS GUIDE

Control Box - Outer Components - Front and Rear

Item #	Part #	Description
Fig. 6		
1	10105700	1/4” Bulkhead Union
2	10105701	1/2” Bulkhead Union
3	10105622	1/4” Mini Brass Ball Valve
4	10105714	1/8” (M) NPTF Hollow Hex Pipe Plug
5	10105709	1/8” Bulkhead Union
6	10105588	Regulator
7	10105587	Pressure Gauge *(Three Required)*
8	10105698	1/4” NPT Elbow (Three Required)
9	10106207	Pneumatic Pressure Indicator *(Two Required)*
10	10105690	10-32 Elbow *(Two Required)*
11	10105589	Emergency Stop Switch
12	10105962	Mounting Ring *(Two Required)*
13	10105591	Switch Valve - Swivel *(Two Required)*
14	10105593	Wash Down Switch
15	10105691	1/8” Elbow *(Four Required)*
16	10105594	Adjustment Knob
17	10105703	1/4” Connector *(Two Required)*
18	10105595	1/4” Three Way Ball Valve
19	10105637	1/4” x 1/2” Tube Elbow *(Two Required)*
20	10105906	1/4”M x 1/4”M Brass Check Valve
21	1011824	1/4” Street Elbow - Galvanized
22	10105697	5/32” Y Splitter *(Three Required)*
23	10105696	1/4” Y Splitter
24	10105688	1/4” Elbow *(Two Required)*
25	10105702	5/32” x 1/4” Tube End Reducer
26	10105590	Electrical Contact Block *(Two Required)*
27	20PFHA24SJ04	1/4” Female Coupling

Figure 6: Control Box - Outer Components - Front and Rear

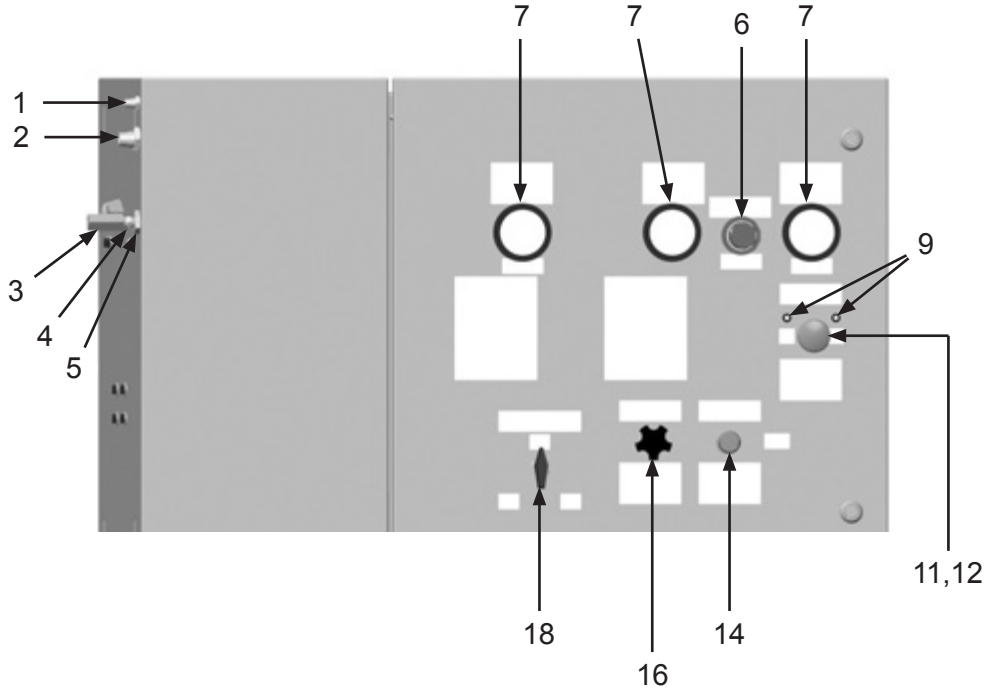

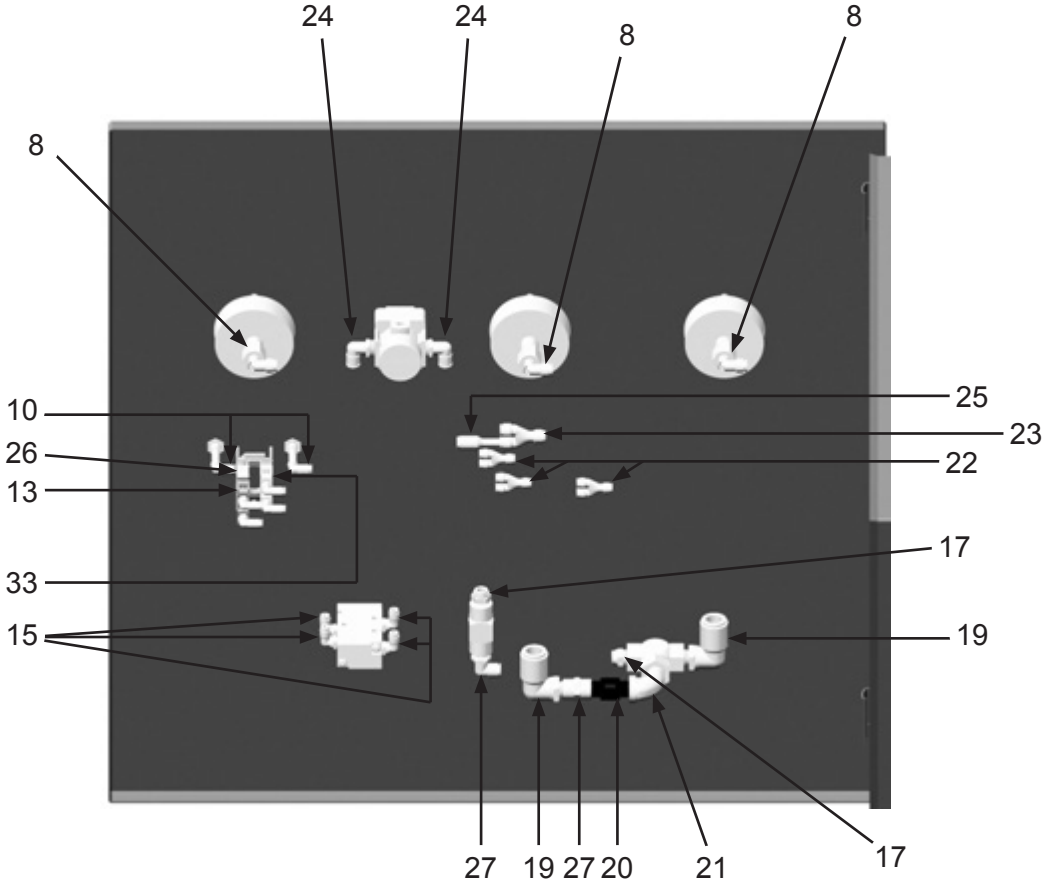

PART NUMBERS AND SCHEMATICS GUIDE

Figure 7: Control Box - Outer Components - Right Side

Item #	Part #	Description
Fig. 7		
1	10105962	Mounting Ring
2	10105591	Switch Valve - Swivel *(Two Required)*
3	10105703	1/4” Connector *(Two Required)*
4	10SB1	1-1/4” Brass Tank Coupling
5	10DXDCP2101	1/8” (M) x 1/4” (M) Quick Disconnect
6	10105709	1/8” (F) Bulkhead Union *(Two Required)*
7	10105688	1/4” Elbow *(Three Required)*
8	10105631	Selector Switch
9	10105590	Electrical Contact Block *(Two Required)*
10	10ME3	1-1/4” 4 Lug Female Coupling
11	20DXDCP20	1/4” Quick Connect Coupler Male
12	1015557	Two Prong Female Receptacle
13	10106026	Two Prong Male Receptacle
14	10105632	1/4” Panel Mount Brass Ball Valve
15	10DXDC21	1/4” x 1/4” (M) NPT Quick Disconnect Coupler Brass
16	10DXDCP2021	1/8” (F) x 1/4” Male Quick Disconnect
17	20PFHA24SB0402	1/4” x 1/8” Reducing Bushing

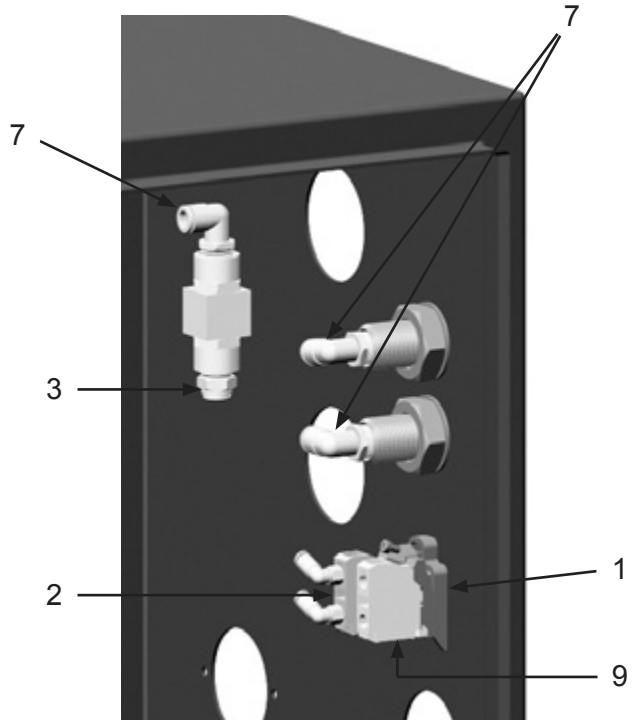

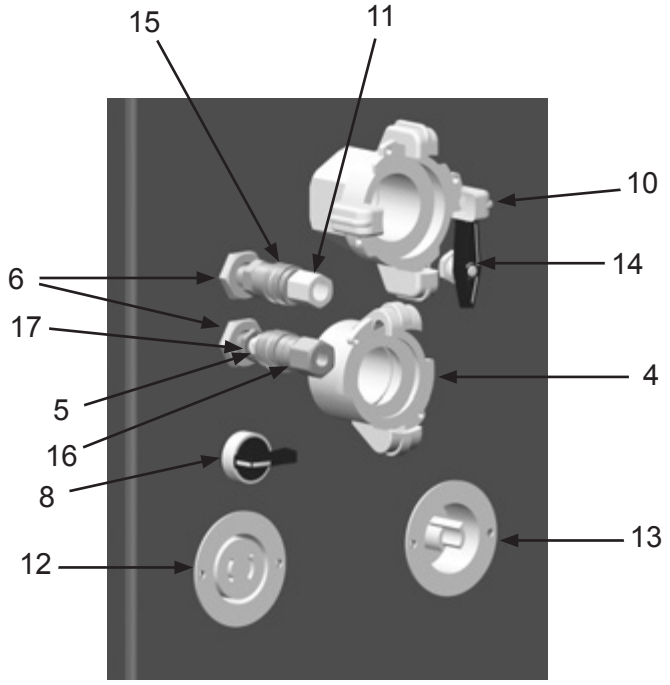

SCHEMATICS

Figure 8: 1/2” Water Lines Schematic

Item #	Part #	Description
Fig. 8		
1	10105685	1/2” Nylon Tubing - Black *(Per Foot)*

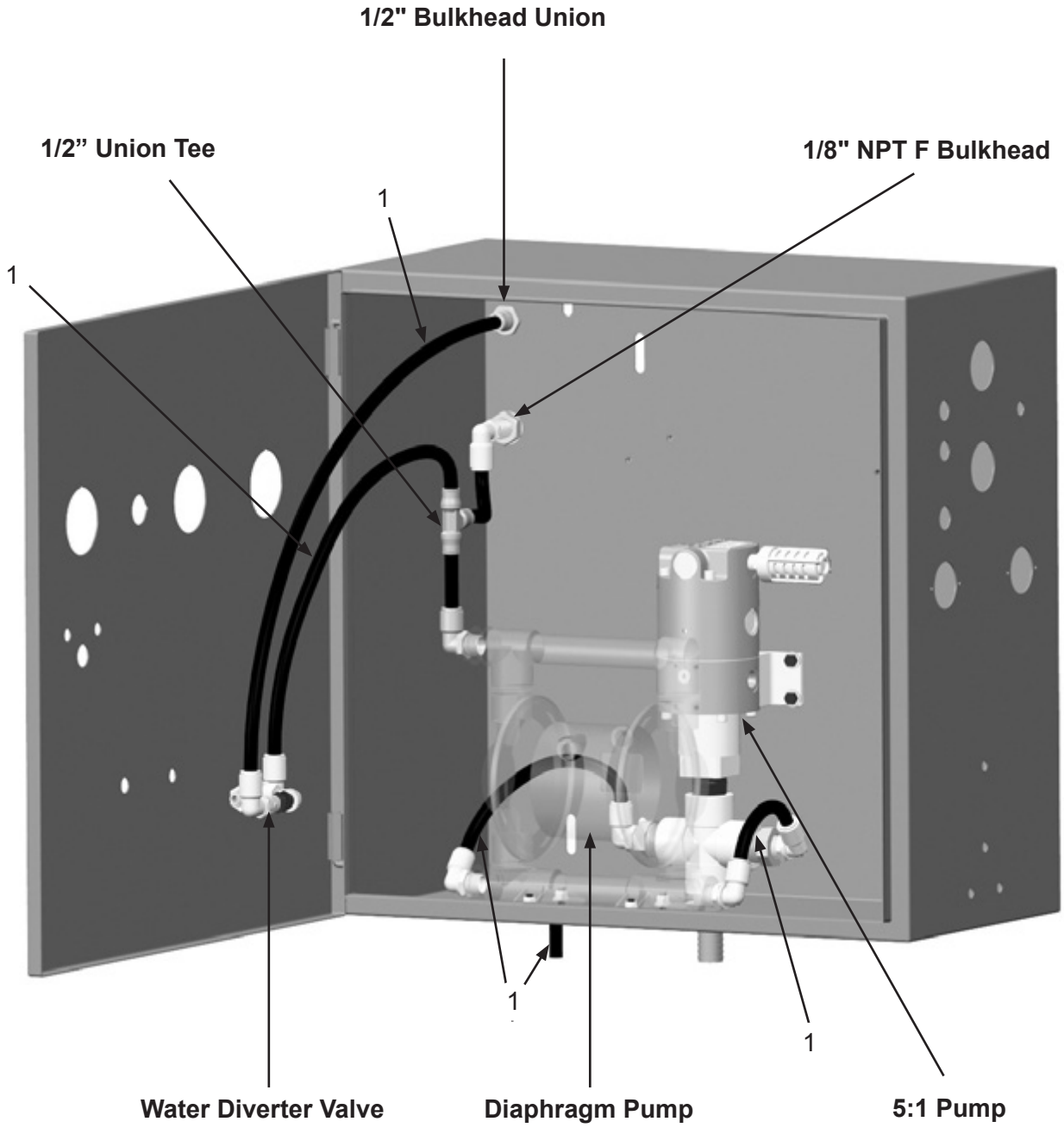

SCHEMATICS

Control Box - 1/4” Air Lines Schematic

Item #	Part #	Description
Fig. 9		
1	10105682	1/4” Nylon Tubing - Yellow *(Per Foot)*
2	10105683	1/4” Nylon Tubing - Green *(Per Foot)*
3	10105684	1/4” Nylon Tubing - White *(Per Foot)*
4	10106332	1/4” Nylon Tubing - Black *(Per Foot)*

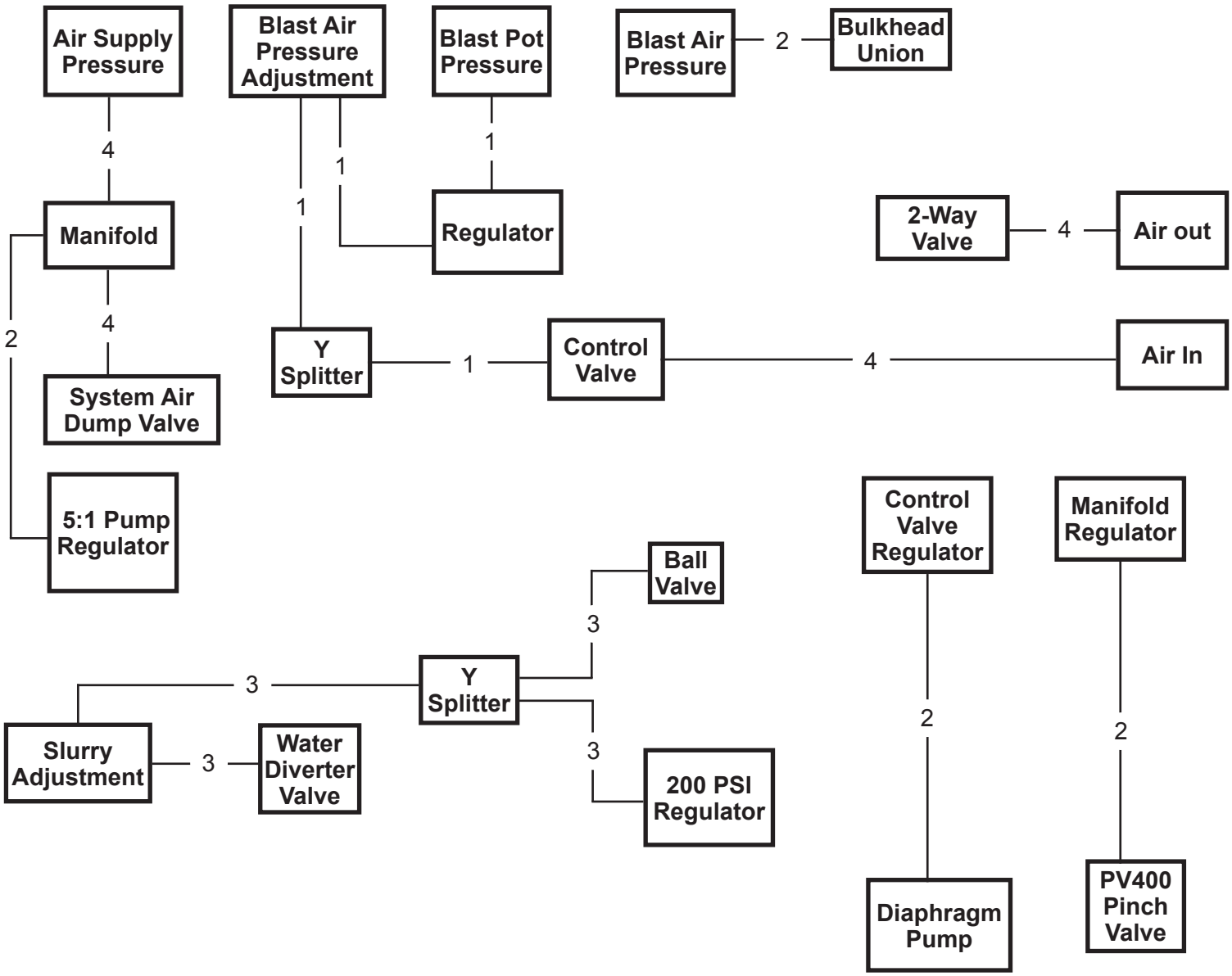

SCHEMATICS

Figure 9: Control Box - 1/4” Air Lines Schematic

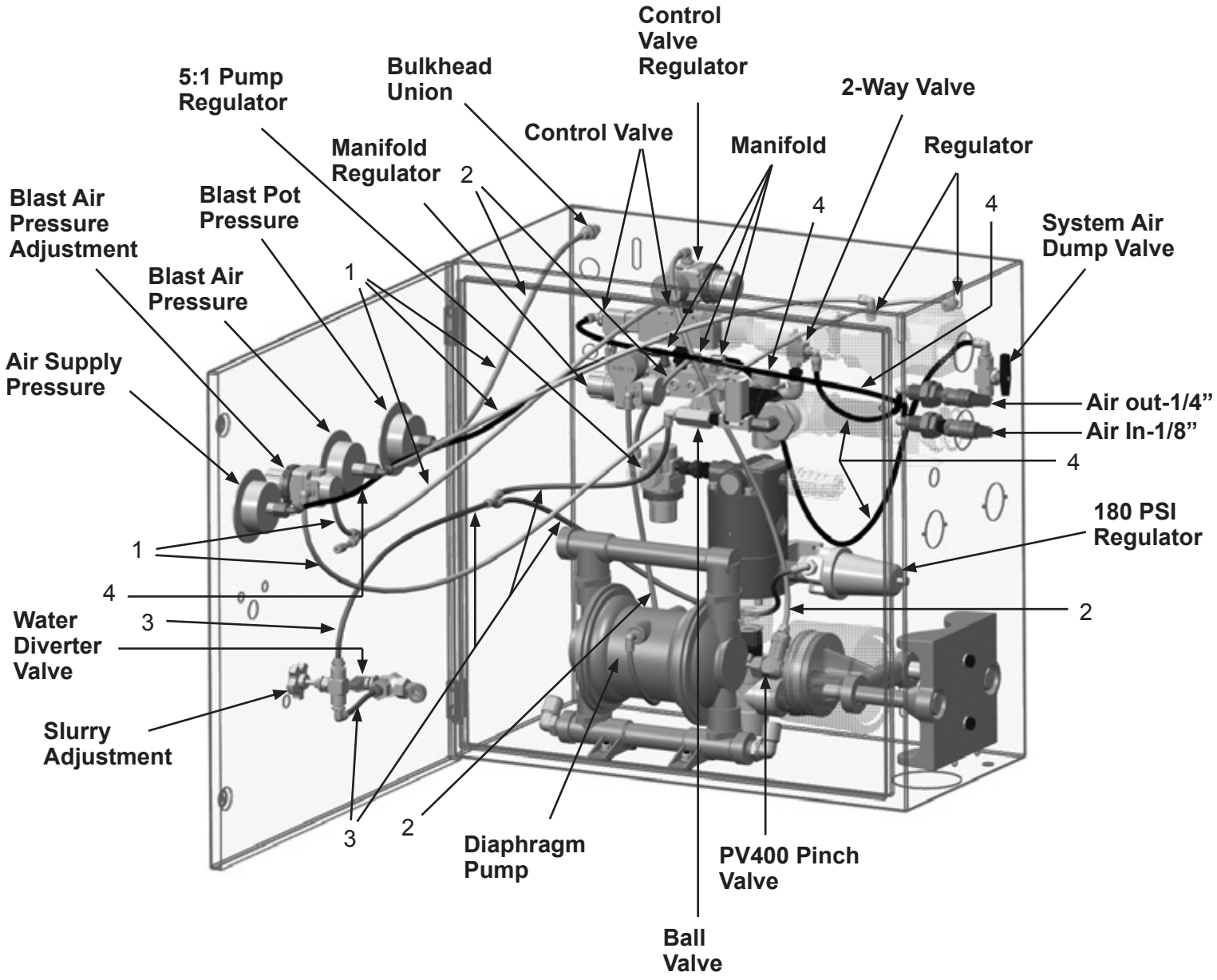

SCHEMATICS

Control Box - 4mm Air Lines Schematic

Item #	Part #	Description
Fig. 10		
1	10105677	4MM Nylon Tubing - Yellow *(Per Foot)*
2	10105678	4MM Nylon Tubing - Black *(Per Foot)*
3	10105679	4MM Nylon Tubing - Red *(Per Foot)*
4	10105680	4MM Nylon Tubing - Blue *(Per Foot)*

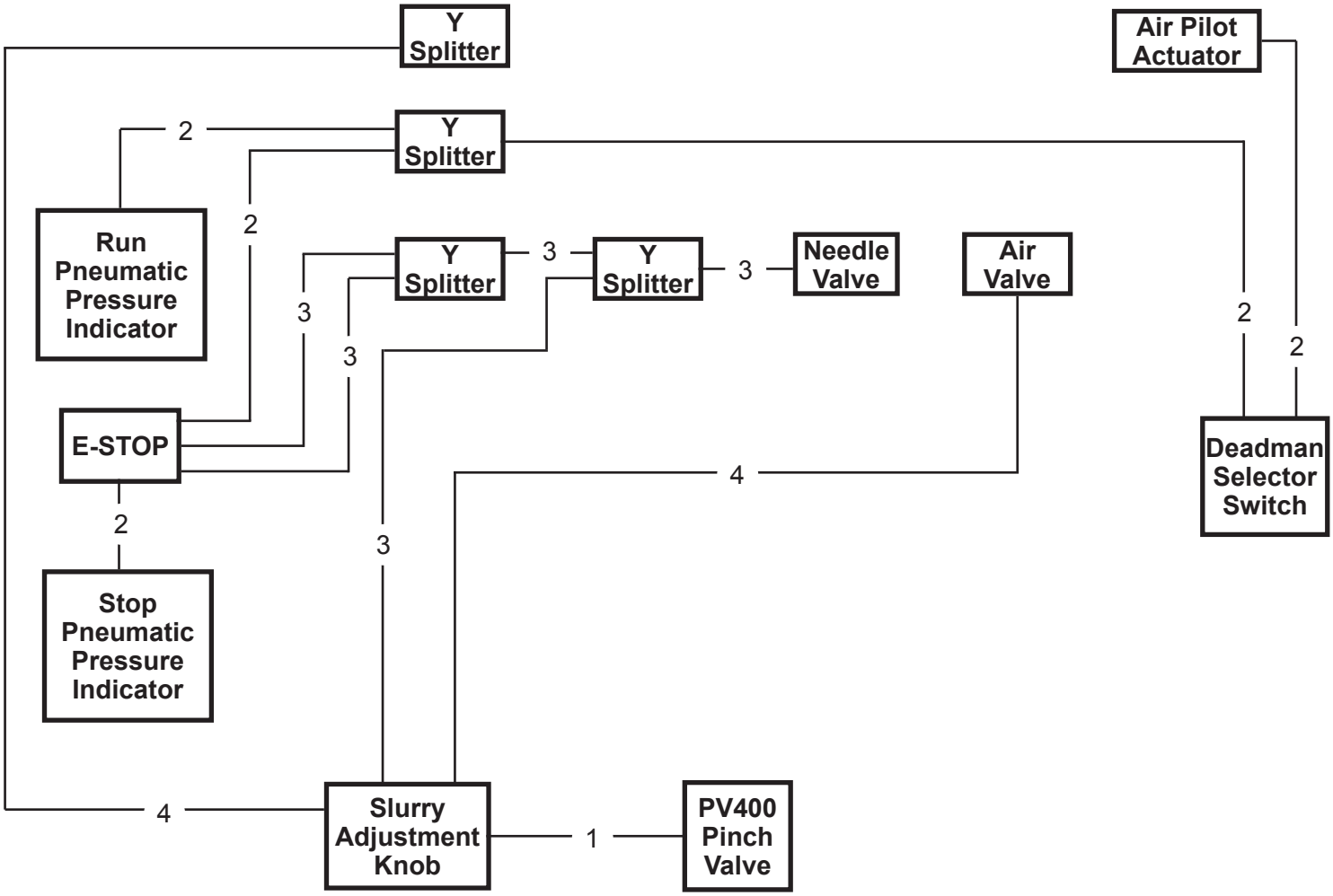

SCHEMATICS

Figure 10: Control Box - 4mm Air Lines Schematic

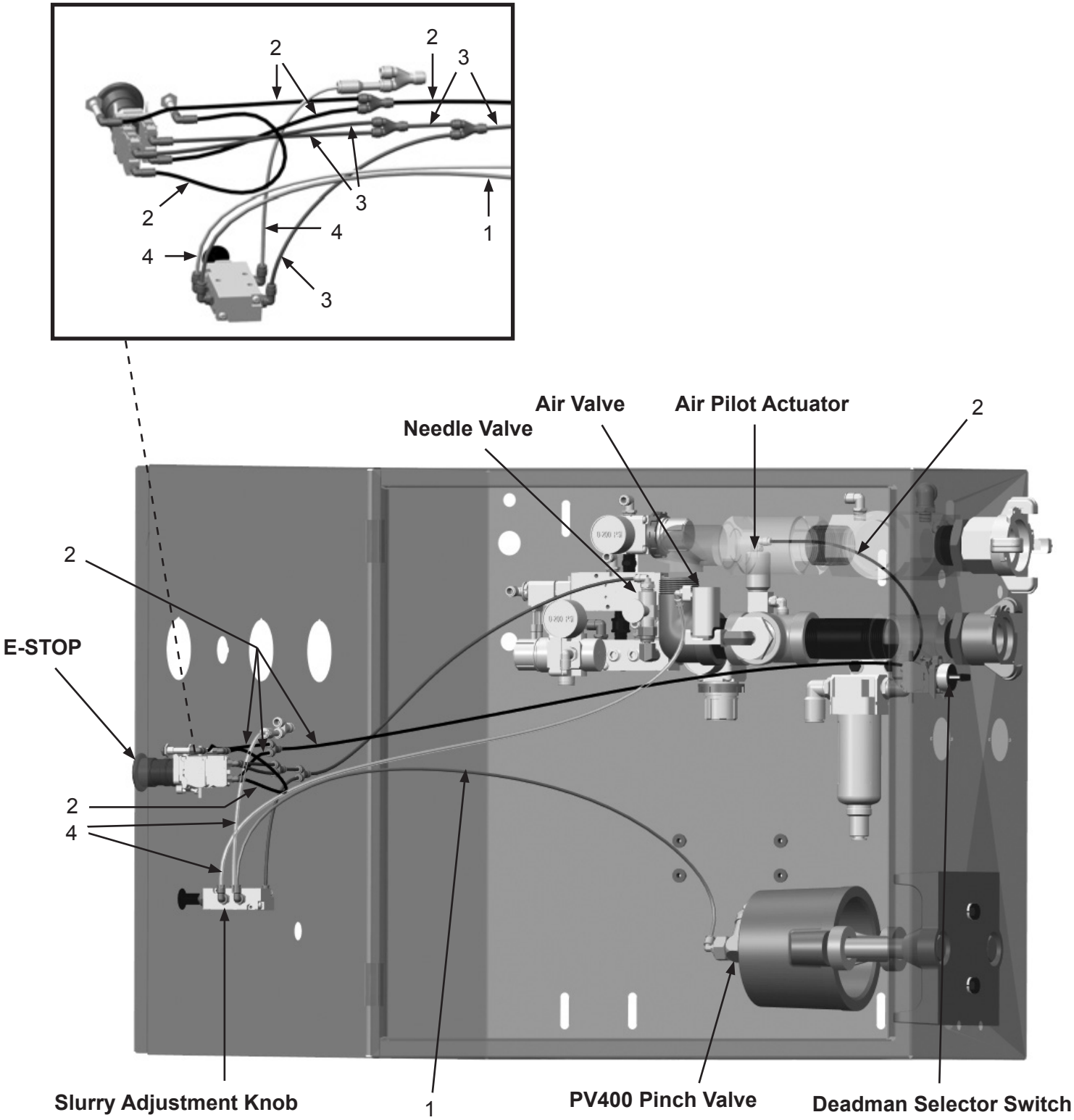

SCHEMATICS

Figure 11: Control Box - 1/2” Air Lines Schematic

Item #	Part #	Description
Fig. 11		
1	10105685	1/2” Nylon Tubing - Black *(Per Foot)*

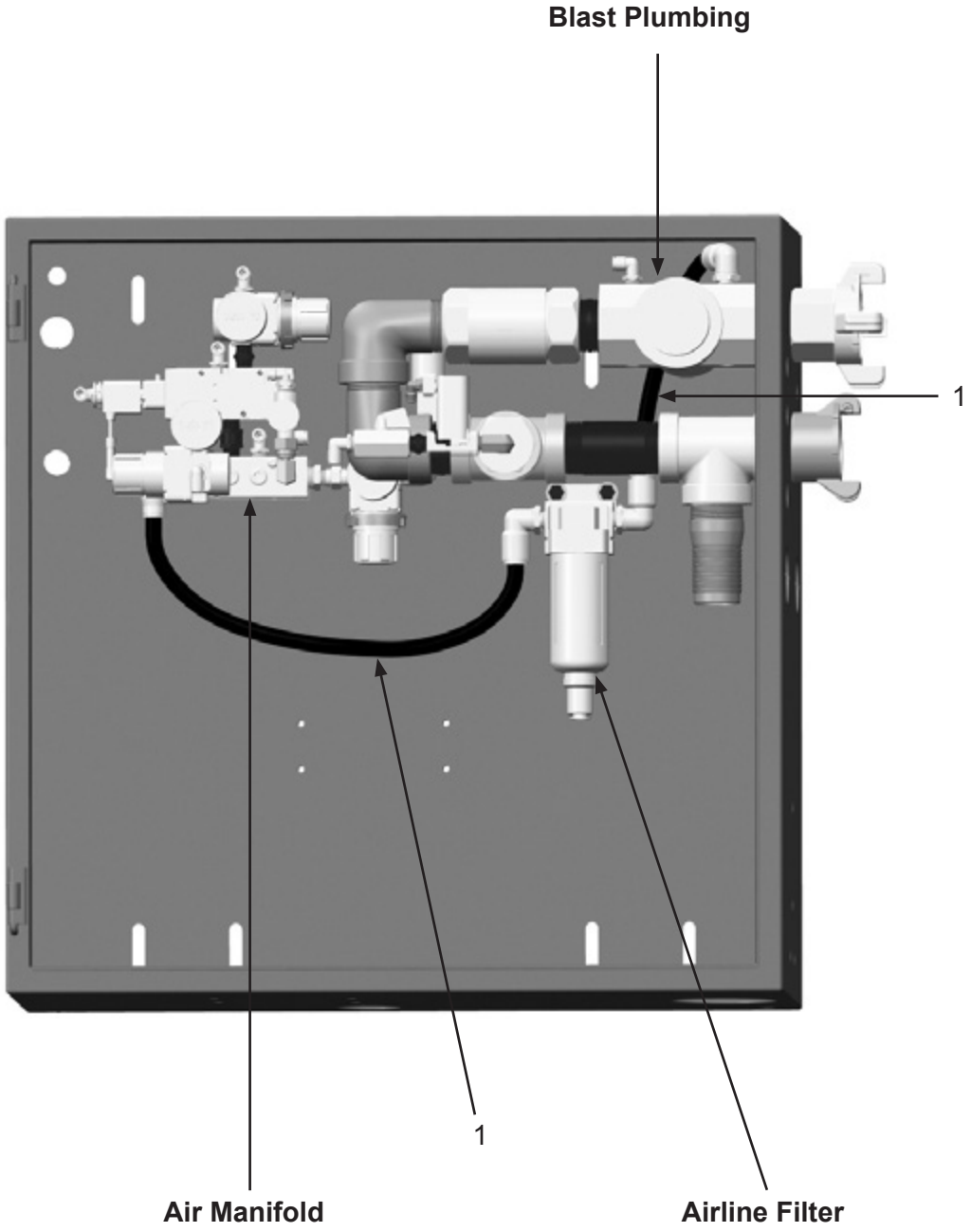

SCHEMATICS

Figure 12: Control Box - Electrical Lines Schematic

Item #	Part #	Description
Fig. 12		
1	10103622	16 AWG Stranded Wire Red *(Per Foot)*
2	10103621	16 AWG Stranded Wire Black *(Per Foot)*

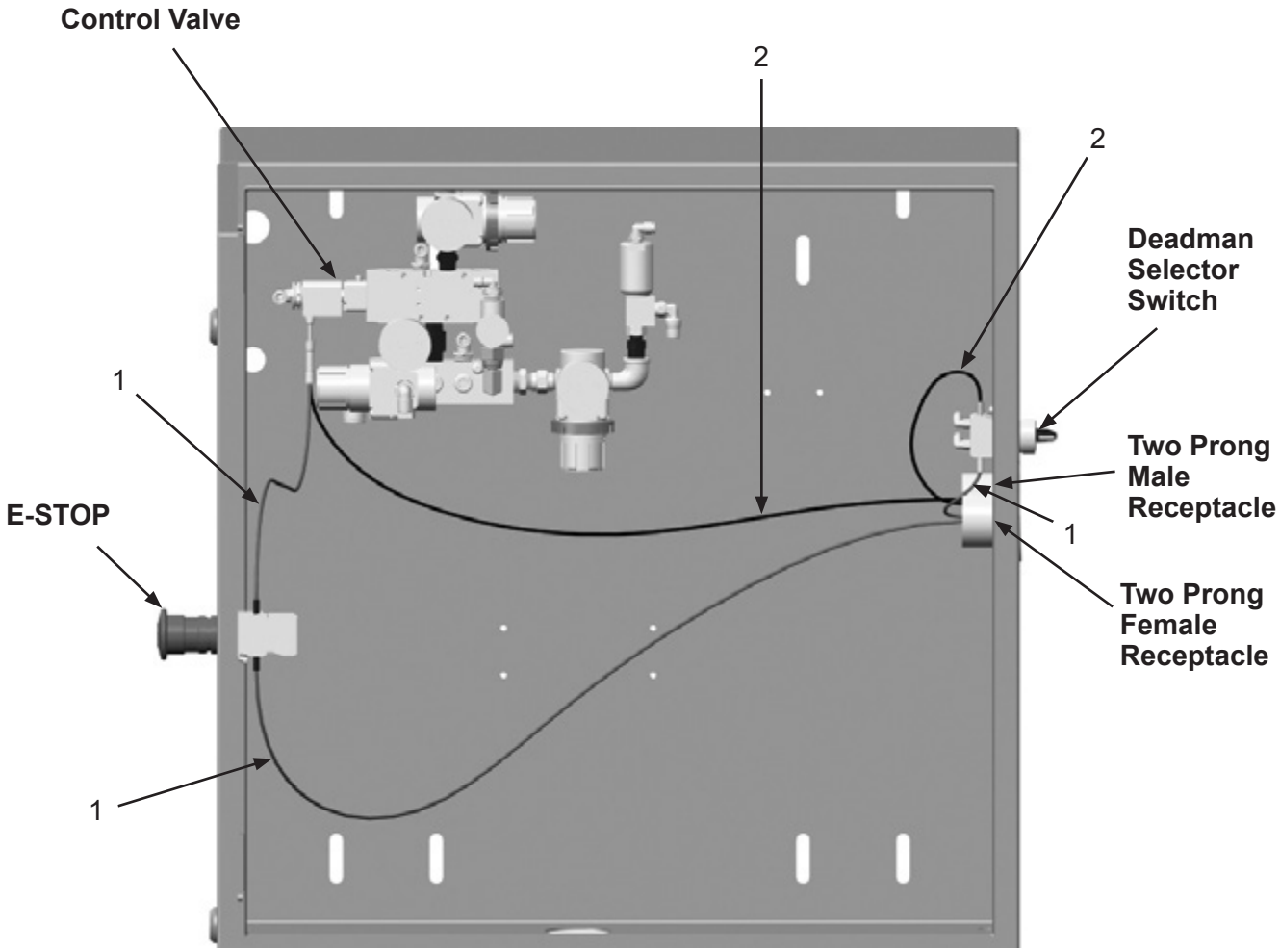

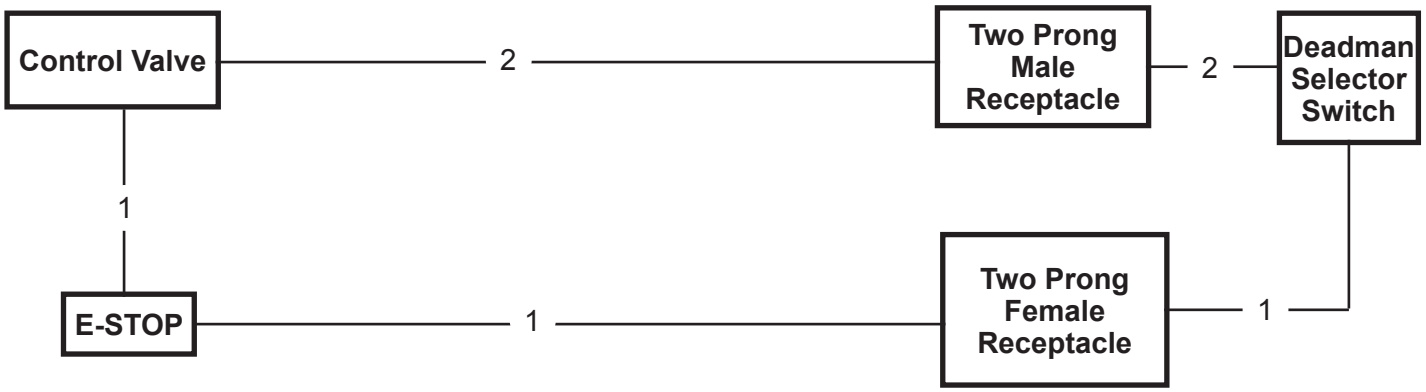

OPTIONAL ACCESSORIES

Part Numbers	ELECTRIC BLAST HOSE ASSEMBLIES					
	Blast Hose I.D. *(inches)*	Hose	Blast Hose Length *(feet)*	Power Cord with 3-Prong Plugs *(feet)*	Coupling	Nozzle Holder
10105763	1-1/4"	10SH114	50'	50'	10QNY2	10NHN250
10105764	1-1/4"	10SH114	50'	50'	10QNY2 *(Quantity of Two)*	—
10105765	1-1/4"	10SH1141	100'	100'	10QNY2 *(Quantity of Two)*	—

Part Numbers	PNEUMATIC BLAST HOSE ASSEMBLIES					
	Blast Hose I.D. *(inches)*	Hose	Blast Hose Length *(feet)*	Remote Control Line Length *(feet)*	Coupling	Nozzle Holder
10105772	1-1/4"	10SH114	50'	55'	10QBR2 *(Quantity of Two)*	—
10105771	1-1/4"	10SH114	50'	55'	10QNY2	10NHN250
10105769	1-1/4"	10SH114	50'	55'	10QNY2 *(Quantity of Two)*	—
10105773	1-1/4"	10SH1141	100'	100'	10QBR2 *(Quantity of Two)*	—
10105770	1-1/4"	10SH1141	100'	100'	10QNY2 *(Quantity of Two)*	—

OPTIONAL ACCESSORIES

	HOSES						
	Part Numbers	**Blast Hose I.D.** *(Inches)*	**Length** *(feet)*	**Coupling**	**Nozzle Holder**	**Working Pressure**	**Fabric Reinforcement**
	1081213	1-1/4"	50'	10QNY2	10NHN250	175 psi	2-Ply
	10SH114	1-1/4"	50'	—	—	175 psi	2-Ply
	10SH1141	1-1/4"	100'	—	—	175 psi	2-Ply

	ELECTRIC CONTROL LINE WITH PLUGS					
	Part Numbers	**Length** *(feet)*	**Gauge**	**# of Wires**	**3-Prong Male Twist-Lock Plug**	**3-Prong Female Twist-Lock Plug**
	1015546	25'	16	2	1015555	1015556
	1015545	50'	16	2	1015555	1015556
	1015547	100'	16	2	1015555	1015556
	1015748	13'	16	3	1015555	1015556
	1015745	50'	16	3	1015555	1015556
	1015747	110'	16	3	1015555	1015556

	PNEUMATIC CONTROL LINE								
	Part Numbers	**Hose Length** *(feet)*	**Working Pressure**	**Hose I.D.**	**Hose O.D.**	**1017012**	**1017013**	**1017014**	**1017015**
	1016002	7'	150 psi	3/16"	7/16"	X	X	X	X
	1016000	55'	150 psi	3/16"	7/16"	X	X	X	X
	1016001	110'	150 psi	3/16"	7/16"	X	X	X	X
	10TLBK	Per Foot	150 psi	3/16"	7/16"	—	—	—	—

OPTIONAL ACCESSORIES

	Part Numbers	NOZZLES AND CONTROL SWITCHES Description
	10TCW750AN	#7 – 7/16" Tungsten Carbide Liner, 1-1/4" Entry, 50mm Threads, Aluminum Jackert, Aluminum Body
	10TCW850AN	#8 – 1/2" Tungsten Carbide Liner, 1-1/4" Entry, 50mm Threads, Aluminum Jackert, Aluminum Body
	1015100	Blastmaster® 151E Remote Control Switch
	1015200	Blastmaster® 152P Remote Control Switch

	Part Numbers	COUPLING SAFETY PINS, COUPLINGS, AND GASKETS Description
	1018000	Safety Cable
	1018002	Coupling Lock Pins, Pack of 25
	10QNY2	Nylon Universal Coupling
	10QBR2	Brass Universal Coupling
	10SBGNY2	Coupling Gaskets, Pack of 10
	10NHN250	Nylon Nozzle Holder, 50mm Threads
	10NW50	Nozzle Washers for 50mm Nozzle Holder, Pack of 10

MAINTENANCE NOTES

DATE	TYPE OF SERVICE	PART NUMBER

CONTACT CENTER

- 3425 East Locust Street
  Davenport, IA 52803

  ph: 800.BLAST.IT (800.252.7848)
  ph: 563.324.2519
  fax: 563.324.6258

REGIONAL BRANCH OFFICES

- **Iowa**
  Davenport
- **Louisiana**
  Gonzales
  Lafayette
- **Ohio**
  Youngstown
- **Texas**
  Beaumont
  Corpus Christi
  Deer Park

40+ NATIONWIDE SHIPPING LOCATIONS

★ Marco Regional Branch Offices and Shipping Locations

● Direct Shipping Locations

ABRASIVES

BLASTING

COATING

DUST COLLECTORS

ENGINEERED SYSTEMS

RENTAL

SAFETY

SERVICE, REPAIR, & MODERNIZATION

VACUUMS

CONTACT MARCO

800.BLAST.IT
(800.252.7848)
563.324.2519
FAX: 563.324.6258

WWW.MARCO.US
SALES@MARCO.US

Marco® and Blastmaster® are registered trademarks of Marco Group International Opco, LLC.
All other brand names or marks are used for identification purposes and are trademarks of their respective owners.

Literature #106M145_8/23/2019