MARCO® 20 CU. FT. ABRASIVE BLASTING POTS

Powered by ALLREDI

PART NUMBERS AND SCHEMATICS GUIDE

Company Profile

Allredi was formed in the early 2020, when two of the largest distributors in the blasting, coating, safety, and environmental industry, APE Companies and Marco Group International, joined forces. While the qualities both companies are known for have not changed, a lot about our business is new. New abilities. New agilities. New ways to help you win. This calls for a new name, Allredi.

This name exemplifies what we have become. It is completely oriented to the needs of our customers. To your needs. It says that when you call us for anything – products, service, expert advice, anything – you can consider it done. Or even better, Allredi done.

We are your right-now supplier. From skills to SKUs, we deliver the goods fast. So you can be more agile every minute, every day. This is who we are. This is what our new name means. Go ahead and expect excellence, because we're bringing it.

Our Mission and Vision

To be the industry's preferred partner in surface preparation solutions through unrivaled technical expertise, customer experience, product availability, and tailored service offerings.

The Allredi Difference

- **Industry Experience** – With Allredi on your team, you have access to expertise which can only come from decades of industry leadership. We have organized our engineering department, production specialists, customer operations, and safety support into a "Center of Competence." As an Allredi customer, you have access to hundreds of years of cumulative experience related to your operations.
- **Manufacturing Excellence** – Allredi is a U.S. based manufacturer of equipment for the Surface Preparation and Protective Coatings industries. Allredi's engineers benchmark the industry to ensure that we design and manufacture superior products that set the "Gold Standard" for performance, safety, and quality.
- **Legendary Customer Service** – Allredi's legendary customer service team is staffed by friendly, highly-trained individuals who are focused on providing the highest level of product support, order accuracy, and customer satisfaction.
- **Product Availability** – We stock over 10,000 SKU's and have over 45 shipping locations to serve North American and International markets for all major brands of blasting, coating, environmental, and safety equipment. Allredi is your right-now supplier, so you can keep your projects moving. From our foundation of strong relationships, we have built a nationwide network that puts vast inventory and ready service close to our customers. We provide advanced expertise, and we deliver the goods fast – so you can easily access the products and services you need to me more agile every minute, every day.
- **Technology Leadership** – Our website provides: Operator's Manuals, Part Numbers and Schematics Guides, SDS information, and key product features and specifications, providing access to information 24/7.

TABLE OF CONTENTS

Part Numbers 4

Part Numbers and Schematics 8

Inspection Door Assembly 8

Pop-up Valve Assembly 9

20 Cu. Ft. Abrasive Blasting Pots – Pneumatic – Single Outlet 10

20 Cu. Ft. Abrasive Blasting Pots – 12-Volt DC – Single Outlet 12

20 Cu. Ft. Abrasive Blasting Pots – 120-Volt AC – Single Outlet 14

20 Cu. Ft. Abrasive Blasting Pots – Pneumatic – Dual Outlet 16

20 Cu. Ft. Abrasive Blasting Pots – 12-Volt DC – Dual Outlet 18

20 Cu. Ft. Abrasive Blasting Pots – 120-Volt AC – Dual Outlet 20

20 Cu. Ft. Abrasive Blasting Pots – 800 CFM Moisture Separator – Pneumatic – Dual Outlet . . . 22

20 Cu. Ft. Abrasive Blasting Pots – 800 Moisture Separator – 12-Volt DC – Dual Outlet 24

20 Cu. Ft. Abrasive Blasting Pots – 800 Moisture Separator – 120-Volt AC – Dual Outlet 26

20 Cu. Ft. Abrasive Blasting Pots –Pneumatic – Dual Outlet – Pressure Release 28

20 Cu. Ft. Abrasive Blasting Pots –12-Volt DC – Dual Outlet – Pressure Release 30

Pusher Line Assembly 32

Exhaust Muffler Assembly 33

Marco® Maxum III Abrasive Metering Valve – Tungsten Carbide and Multiport Sleeve 34

Marco® Maxum III Abrasive Metering Valve – Urethane Sleeve 36

Marco® Maxum III Abrasive Metering Valve — Tungsten Carbide Sleeve — 2” 38

Marco® Maxum III Abrasive Metering Valve — Urethane Sleeve — 2” 40

Marco® 130P Remote Control System 42

High Flow Gatekeeper Air Valve 44

12-Volt DC Marco® 130E Remote Control System 46

120-Volt AC Marco® 130E Remote Control System 48

120-Volt AC Marco® 130E Remote Control System - Multiple Outlet 50

Marco® 123P Remote Control System 52

Tandem Remote Control Valve 53

Marco® 123E 12-Volt DC Remote Control System . 55

12-Volt DC 190 Electric Control Assembly 56

12-Volt DC 190 Electric Solenoid 57

12-Volt AC 190 Electric Control Assembly 58

12-Volt AC 190 Electric Solenoid 59

Marco® 120-Volt AC to 12-Volt AC Power Converter 60

190 Pneumatic Solenoid. 61

Optional Accessories 62

Literature References 63

PART NUMBERS

Part Numbers	MARCO® 20 CU. FT. ABRASIVE BLASTING POT – SINGLE OUTLET					
	Power Source	Marco® Remote Control System	Marco® Remote Control Switch	1-1/2" Marco® Maxum III Abrasive Metering Valve Sleeve Material	1-1/2" Extractor Abrasive Blasitng Pot Moisture Separator	Outlets
10106997	Pneumatic	130P	152P	Tungsten Carbide		Single
10106997PKA	Pneumatic	130P	152P	Tungsten Carbide	X	Single
10106999	Pneumatic	130P	152P	Urethane		Single
10106999PKA	Pneumatic	130P	152P	Urethane	X	Single
10109134	Pneumatic	123P	152P	*Bantam Valve		Single
10107001	12-Volt DC	130E	151E	Tungsten Carbide		Single
10107001PKA	12-Volt DC	130E	151E	Tungsten Carbide	X	Single
10107003	12-Volt DC	130E	151E	Urethane		Single
10107003PKA	12-Volt DC	130E	151E	Urethane	X	Single
10107005	120-Volt AC	130E	151E	Tungsten Carbide		Single
10107005PKA	120-Volt AC	130E	151E	Tungsten Carbide	X	Single
10107007	120-Volt AC	130E	151E	Urethane		Single
10107007PKA	120-Volt AC	130E	151E	Urethane	X	Single

Pneumatic

Electric

PART NUMBERS

Part Numbers	MARCO® 20 CU. FT. ABRASIVE BLASTING POT – DUAL OUTLET				
	Power Source	Marco® Remote Control System	Marco® Remote Control Switch	1-1/2" Marco® Maxum III Abrasive Metering Valve Sleeve Material	Outlets
10107009	Pneumatic	130P	152P	Tungsten Carbide	Dual
10107011	Pneumatic	130P	152P	Urethane	Dual
10107013	12-Volt DC	130E	151E	Tungsten Carbide	Dual
10107015	12-Volt DC	130E	151E	Urethane	Dual
10107017	120-Volt AC	130E	151E	Tungsten Carbide	Dual
10107019	120-Volt AC	130E	151E	Urethane	Dual

Pneumatic

Electric

PART NUMBERS

Part Numbers	MARCO® 20 CU. FT. ABRASIVE BLASTING POT - DUAL OUTLET - 800 CFM MOISTURE SEPARATOR					
	Power Source	Marco® Remote Control System	Marco® Remote Control Switch	1-1/2" Marco® Maxum III Abrasive Metering Valve Sleeve Material	800 CFM Moisture Separator	Outlets
10106849	Pneumatic	130P	152P	Tungsten Carbide	X	Dual
10107506	Pneumatic	130P	152P	Urethane	X	Dual
10106850	12-Volt DC	130E	151E	Tungsten Carbide	X	Dual
10107507	12-Volt DC	130E	151E	Urethane	X	Dual
10107508	120-Volt AC	130E	151E	Tungsten Carbide	X	Dual
10107509	120-Volt AC	130E	151E	Urethane	X	Dual

Pneumatic

Electric

PART NUMBERS

Part Numbers	MARCO® 20 CU. FT. ABRASIVE BLASTING POT – DUAL OUTLET - PRESSURE RELEASE				
	Power Source	Marco® Remote Control System	Marco® Remote Control Switch	1-1/2" Marco® Maxum III Abrasive Metering Valve Sleeve Material	Outlets
10108353	Pneumatic	123P	152P	Tungsten Carbide	Dual
10109057	Pneumatic	123P	152P	Urethane	Dual
10109007	12-Volt DC	123E	151E	Tungsten Carbide	Dual
10110394	12-Volt DC	123E	151E	Urethane	Dual

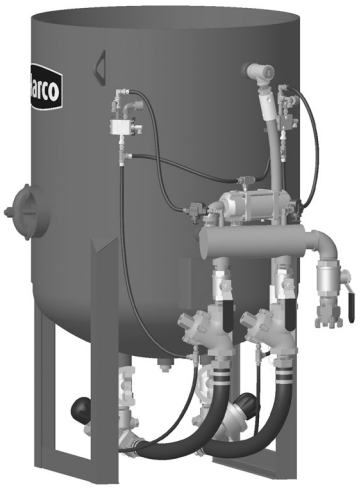

Pneumatic

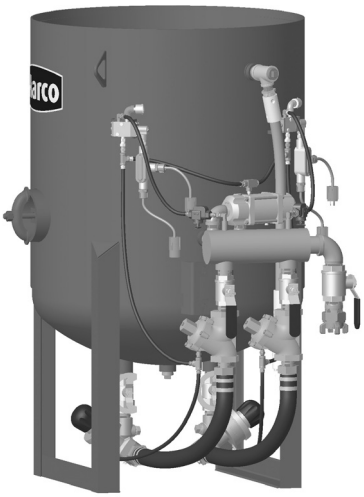

Electric

PART NUMBERS AND SCHEMATICS

Figure 1: Inspection Door Assembly

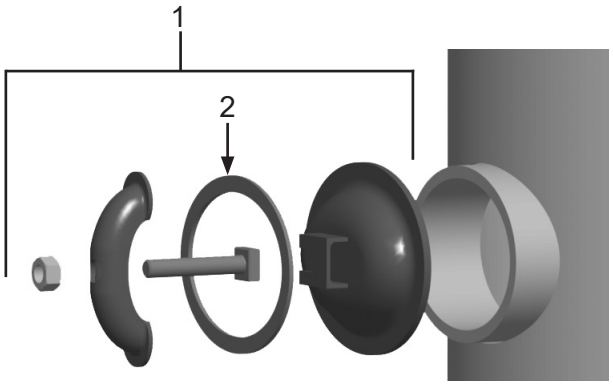

Item #	Part #	Description
Fig. 1		
1	1006200	6" x 8" Inspection Door Assembly
2	1006201	Gasket

PART NUMBERS AND SCHEMATICS

Figure 2: Pop-up Valve Assembly

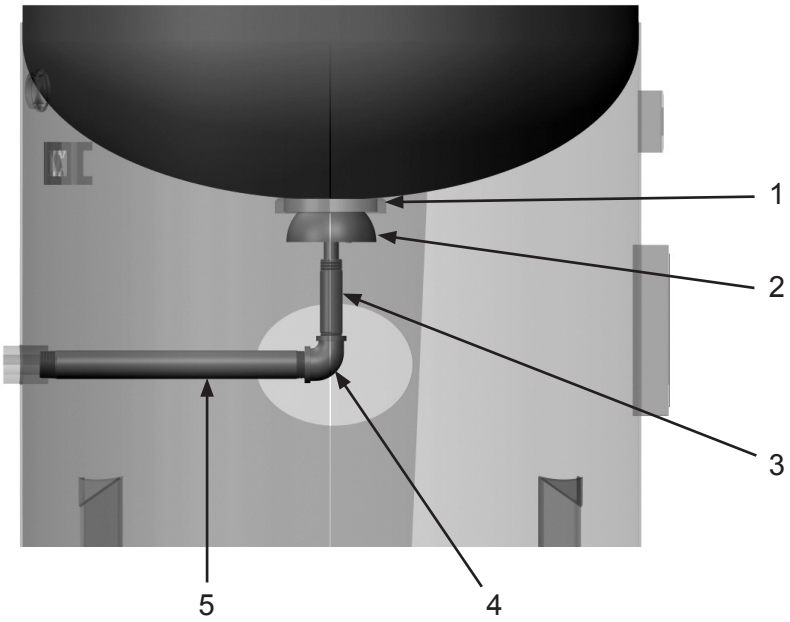

Item #	Part #	Description
Fig. 2		
1	1006040	Pop-Up Valve Seat
2	1006030	Pop-Up Valve
3	1006209	1” x 9-1/2" NPT Pipe Nipple
4	1006210	1-1/4” x 1” 90 ° Elbow
5	10106848	1-1/4" x 16" NPT Pipe Nipple

PART NUMBERS AND SCHEMATICS

20 Cu. Ft. Abrasive Blasting Pots – Pneumatic – Single Outlet

Item #	Part #	Description
Fig. 3		
—	**10106997**	**20 Cu. Ft. Abrasive Blasting Pots – Maxum III – Tungsten Carbide – Pneumatic**
—	**10106999**	**20 Cu. Ft. Abrasive Blasting Pots – Maxum III – Urethane – Pneumatic**
1	1011201	1-1/4" NPT Close Nipple
2	1011817	1-1/4" x 1-1/4" x 1" Pipe Tee
3	1011902	1-1/4" Square Head Plug
4	1012151	1" Galvanized Close Nipple *(Two Required)*
5	1011601	1" NPT Full Port Brass Ball Valve
6	1011100	Exhaust Muffler Assembly *(See Figure 15)*
7	10ME4	1-1/2" NPT (F) 4-Lug Air Hose Coupling
8	1014015	1-1/2" Close Nipple *(Five Required)*
9	1011603	1-1/2" NPT Full Port Brass Ball Valve *(Two Required)*
10	1011211	1-1/2" NPT x 5-1/2" Pipe Nipple
	10105026	1-1/2” NPT x 9” Pipe Nipple (PKA Only)
11	1011828	1-1/2" 90° Elbow with 1/2" Out
12	1011836	1-1/2" x 1-1/2" x 1-1/4" Pipe Tee
13	1011606A	1-1/4" Ball Valve
14	—	1-1/2" Pusher Line Assembly *(See Figure 14)*
15	10SB2S	1-1/2" Straight Thread Coupling
16	10101946	Maxum III Valve 1-1/2" Urethane
—	10101950	Maxum III Valve 1-1/2" Tungsten Carbide
17	1011201	1-1/4" Closed Nipple *(Two Required)*
18	1011204	1-1/4" x 3" Nipple – Galvanized
19	1011818	1/2" x 1/4" Galvanized Bushing
—	10103834	130P Remote Control System
—	1091020	Warning Plate
—	1091025	Hazard Identification Tag
—	1091045	Hazard Identification Tag

PART NUMBERS AND SCHEMATICS

Figure 3: 20 Cu. Ft. Abrasive Blasting Pots – Pneumatic – Single Outlet

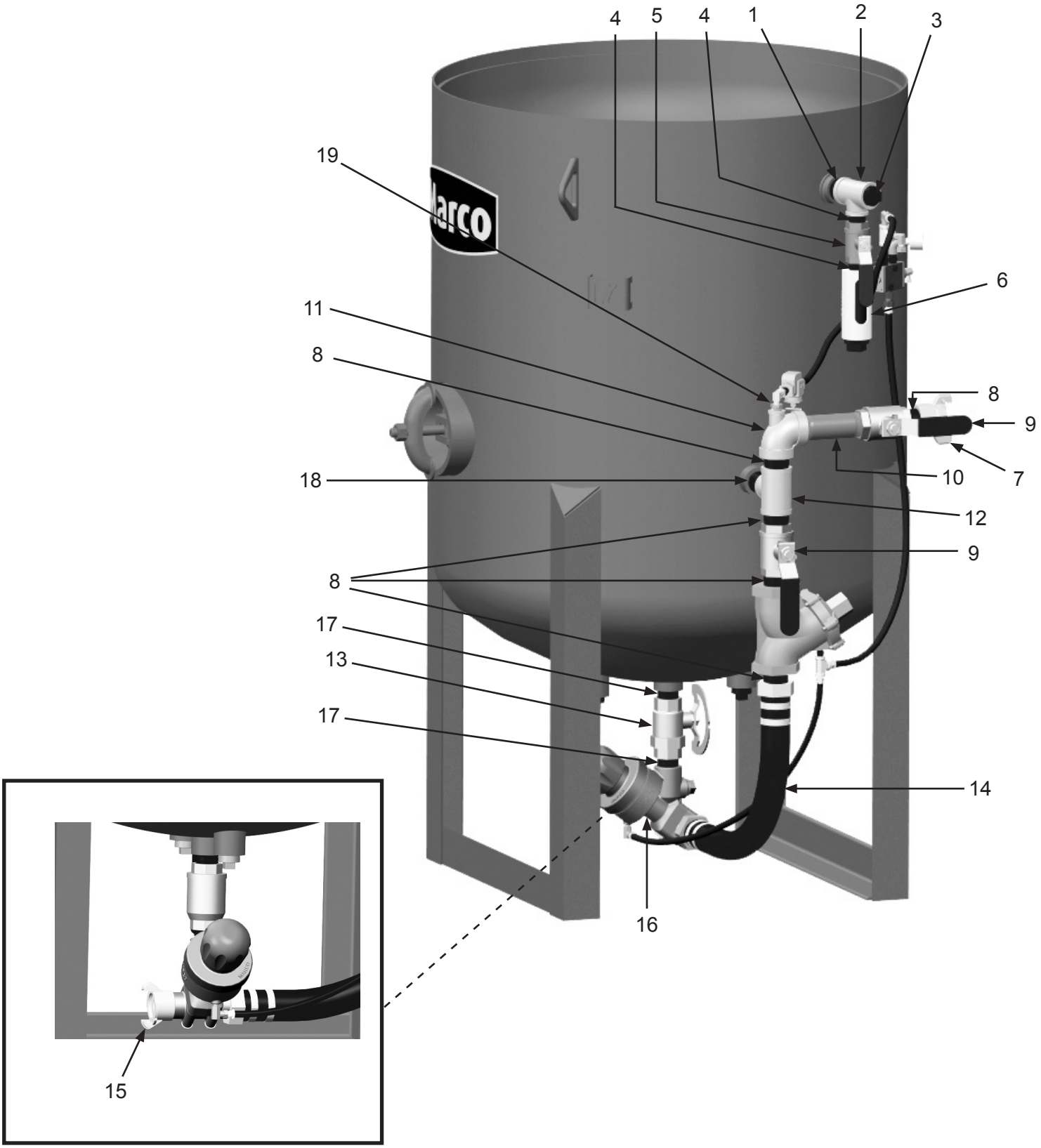

PART NUMBERS AND SCHEMATICS

20 Cu. Ft. Abrasive Blasting Pots – 12-Volt DC – Single Outlet

Item #	Part #	Description
Fig. 4		
—	**10107001**	**20 Cu. Ft. Abrasive Blasting Pots – Maxum III – Tungsten Carbide – 12-Volt DC**
—	**10107003**	**20 Cu. Ft. Abrasive Blasting Pots – Maxum III – Urethane – 12-Volt DC**
1	1011201	1-1/4" NPT Close Nipple
2	1011817	1-1/4" x 1-1/4" x 1" Pipe Tee
3	1011902	1-1/4" Square Head Plug
4	1012151	1" Galvanized Close Nipple *(Two Required)*
5	1011601	1" NPT Full Port Brass Ball Valve
6	1011100	Exhaust Muffler Assembly *(See Figure 15)*
7	10ME4	1-1/2" NPT (F) 4-Lug Air Hose Coupling
8	1014015	1-1/2" Close Nipple *(Five Required)*
9	1011603	1-1/2" NPT Full Port Brass Ball Valve *(Two Required)*
10	1011211	1-1/2" NPT x 5-1/2" Pipe Nipple
	10105026	1-1/2” NPT x 9” Pipe Nipple (PKA Only)
11	1011828	1-1/2" 90° Elbow With 1/2" Out
12	1011836	1-1/2" x 1-1/2" x 1-1/4" Pipe Tee
13	1011606A	1-1/4" Ball Valve
14	—	1-1/2" Pusher Line Assembly *(See Figure 14)*
15	10SB2S	1-1/2" Straight Thread Coupling
16	10101946	Maxum III Valve 1-1/2" Urethane
—	10101950	Maxum III Valve 1-1/2" Tungsten Carbide
17	1011201	1-1/4" Closed Nipple *(Two Required)*
18	1011204	1-1/4" x 3" Nipple – Galvanized
19	1011818	1/2" x 1/4" Galvanized Bushing
—	10103835	130E Remote Control System
—	1091020	Warning Plate
—	1091025	Hazard Identification Tag
—	1091045	Hazard Identification Tag

PART NUMBERS AND SCHEMATICS

Figure 4: 20 Cu. Ft. Abrasive Blasting Pots – 12-Volt DC – Single Outlet

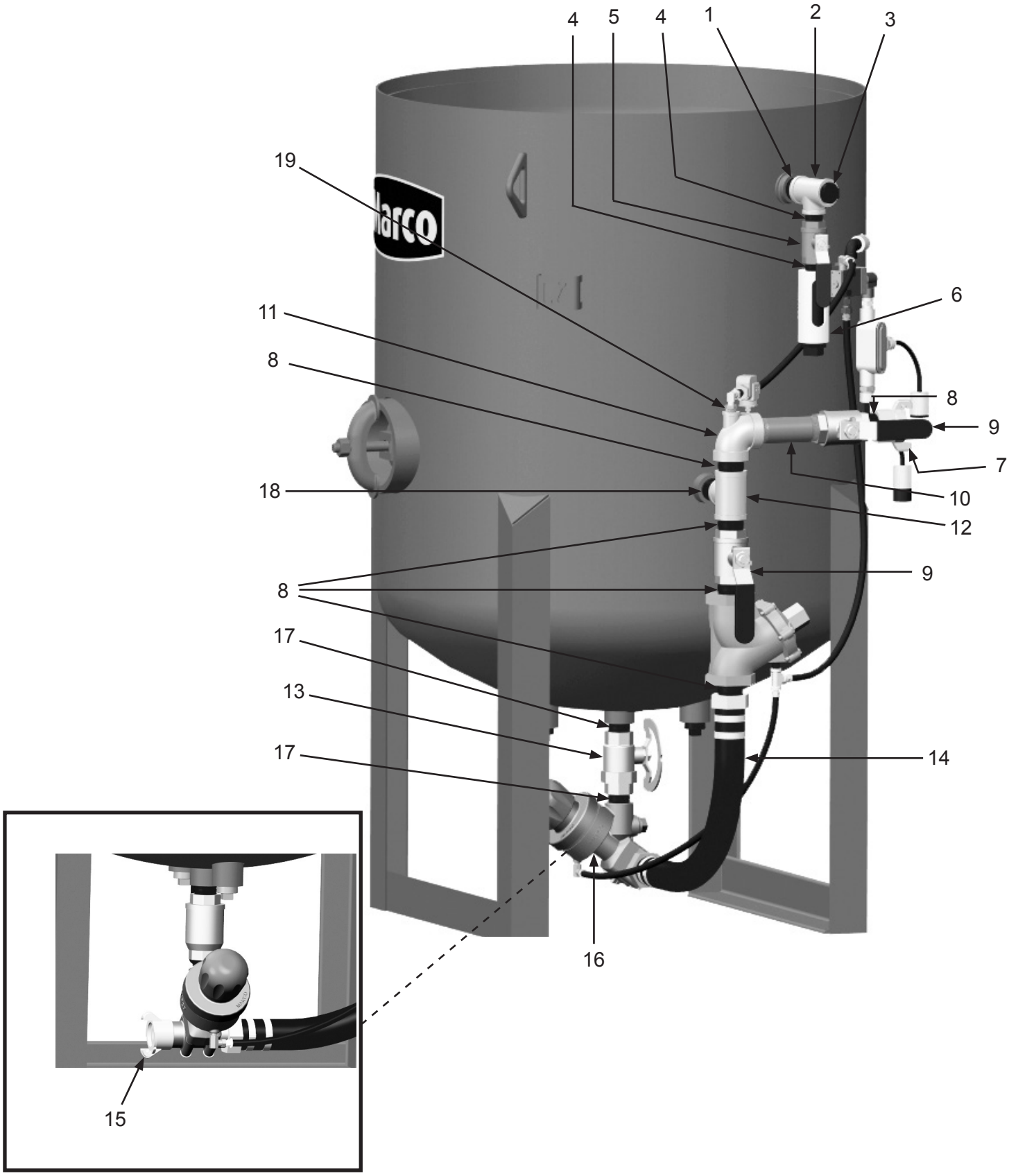

PART NUMBERS AND SCHEMATICS

20 Cu. Ft. Abrasive Blasting Pots – 120-Volt AC – Single Outlet

Item #	Part #	Description
Fig. 5		
—	**10107005**	**20 Cu. Ft. Abrasive Blasting Pots – Maxum III – Tungsten Carbide – 120-Volt AC**
—	**10107007**	**20 Cu. Ft. Abrasive Blasting Pots – Maxum III – Urethane – 120-Volt AC**
1	1011201	1-1/4" NPT Close Nipple
2	1011817	1-1/4" x 1-1/4" x 1" Pipe Tee
3	1011902	1-1/4" Square Head Plug
4	1012151	1" Galvanized Close Nipple *(Two Required)*
5	1011601	1" NPT Full Port Brass Ball Valve
6	1011100	Exhaust Muffler Assembly *(See Figure 15)*
7	10ME4	1-1/2" NPT (F) 4-Lug Air Hose Coupling
8	1014015	1-1/2" Close Nipple *(Five Required)*
9	1011603	1-1/2" NPT Full Port Brass Ball Valve *(Two Required)*
10	1011211 10105026	1-1/2" NPT x 5-1/2" Pipe Nipple 1-1/2” NPT x 9” Pipe Nipple (PKA Only)
11	1011828	1-1/2" 90° Elbow with 1/2" Out
12	1011836	1-1/2" x 1-1/2" x 1-1/4" Pipe Tee
13	1011606A	1-1/4" Ball Valve
14	—	1-1/2" Pusher Line Assembly *(See Figure 14)*
15	10SB2S	1-1/2" Straight Thread Coupling
16 —	10101946 10101950	Maxum III Valve 1-1/2" Urethane Maxum III Valve 1-1/2” Tungsten Carbide
17	1011201	1-1/4" Closed Nipple *(Two Required)*
18	1011204	1-1/4" x 3" Nipple – Galvanized
19	1011818	1/2" x 1/4" Galvanized Bushing
20	1012323	1/4-20 Zinc Lock Nut with Nylon Insert *(Two Required)*
21	1030020	Marco® 120-Volt AC to 12-Volt AC Converter *(Optional)*
22	1012154	1/4-20 x 1" Hex Bolt *(Four Required)*
23	1014017	1/4" Flat Washer *(Four Required)*
—	10103835	130E Remote Control System
—	1091020	Warning Plate
—	1091025	Hazard Identification Tag
—	1091045	Hazard Identification Tag

PART NUMBERS AND SCHEMATICS

Figure 5: 20 Cu. Ft. Abrasive Blasting Pots – 120-Volt AC – Single Outlet

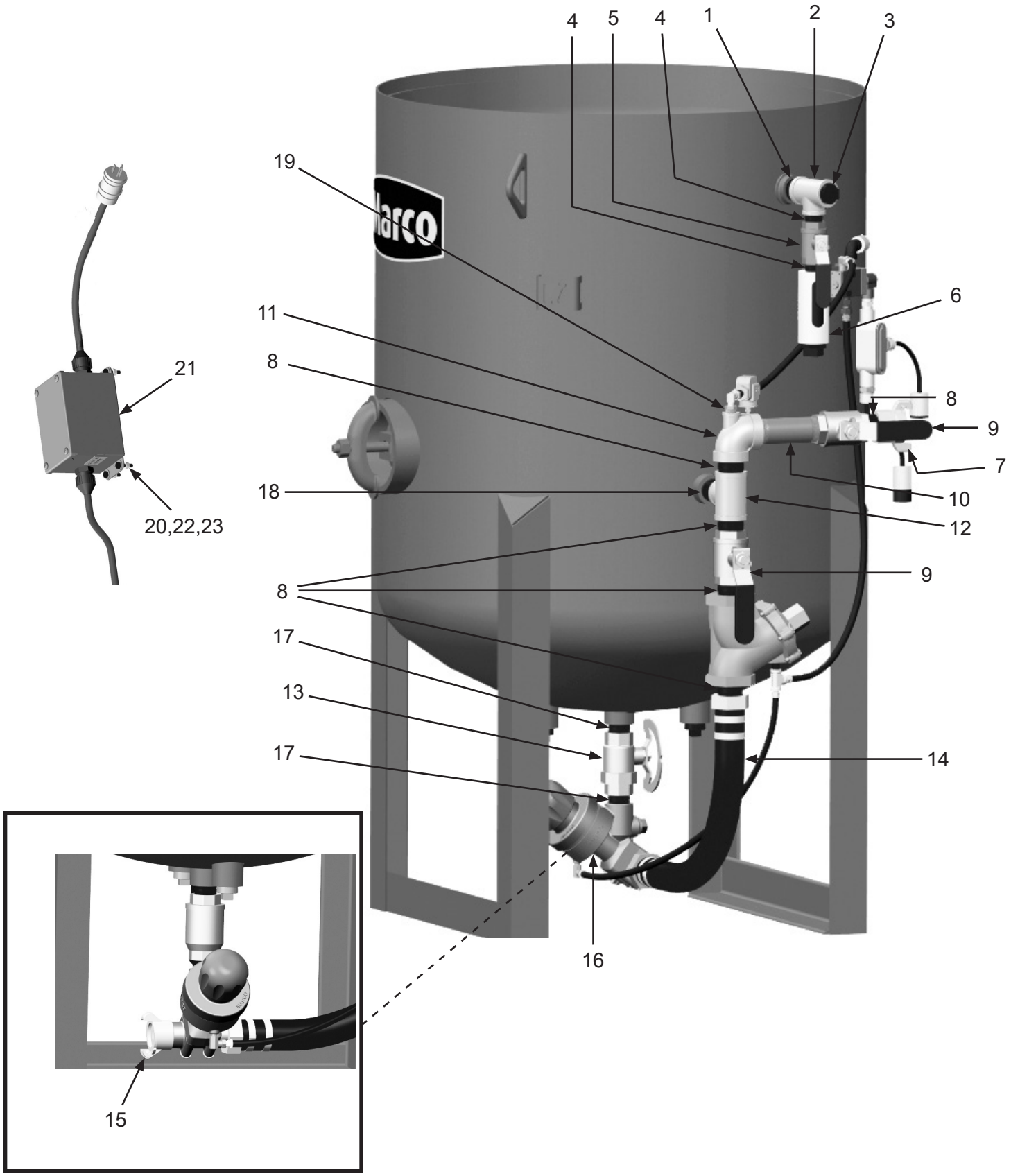

PART NUMBERS AND SCHEMATICS

20 Cu. Ft. Abrasive Blasting Pots – Pneumatic – Dual Outlet

Item #	Part #	Description
Fig. 6		
—	**10107009**	**20 Cu. Ft. Abrasive Blasting Pots – Pneumatic – Dual Outlet – Tungsten Carbide**
—	**10107011**	**20 Cu. Ft. Abrasive Blasting Pots – Pneumatic – Dual Outlet – Urethane**
1	1011201	1-1/4" NPT Close Nipple
2	1011817	1-1/4" x 1-1/4" x 1" Pipe Tee
3	1011902	1-1/4" Square Head Plug
4	1012151	1" Galvanized Close Nipple *(Two Required)*
5	1011601	1" NPT Full Port Brass Ball Valve
6	1011100	Exhaust Muffler Assembly *(See Figure 15)*
7	10ME5	2" NPT (F) 4-Lug Air Hose Coupling
8	1014015	1-1/2" Close Nipple *(Five Required)*
9	1011603	1-1/2" NPT Full Port Brass Ball Valve *(Two Required)*
10	10106863	Manifold
11	10101265	2" x 90° Elbow
12	1006502	1-1/4" Female Pipe Union
13	1011606A	1-1/4" Ball Valve
14	—	1-1/2" Pusher Line Assembly *(See Figure 14)*
15	10SB2S	1-1/2" Straight Thread Coupling
16	10101946	Maxum III Valve 1-1/2" Urethane
—	10101950	Maxum III Valve 1-1/2" Tungsten Carbide
17	1011201	1-1/4" Closed Nipple *(Two Required)*
18	1011604	2" NPT Full Port Brass Ball Valve
19	1001806	2" Close Nipple
—	10103834	130P Remote Control System *(Two Required)*
—	1091020	Warning Plate
—	1091025	Hazard Identification Tag
—	1091045	Hazard Identification Tag

PART NUMBERS AND SCHEMATICS

Figure 6: 20 Cu. Ft. Abrasive Blasting Pots – Pneumatic – Dual Outlet

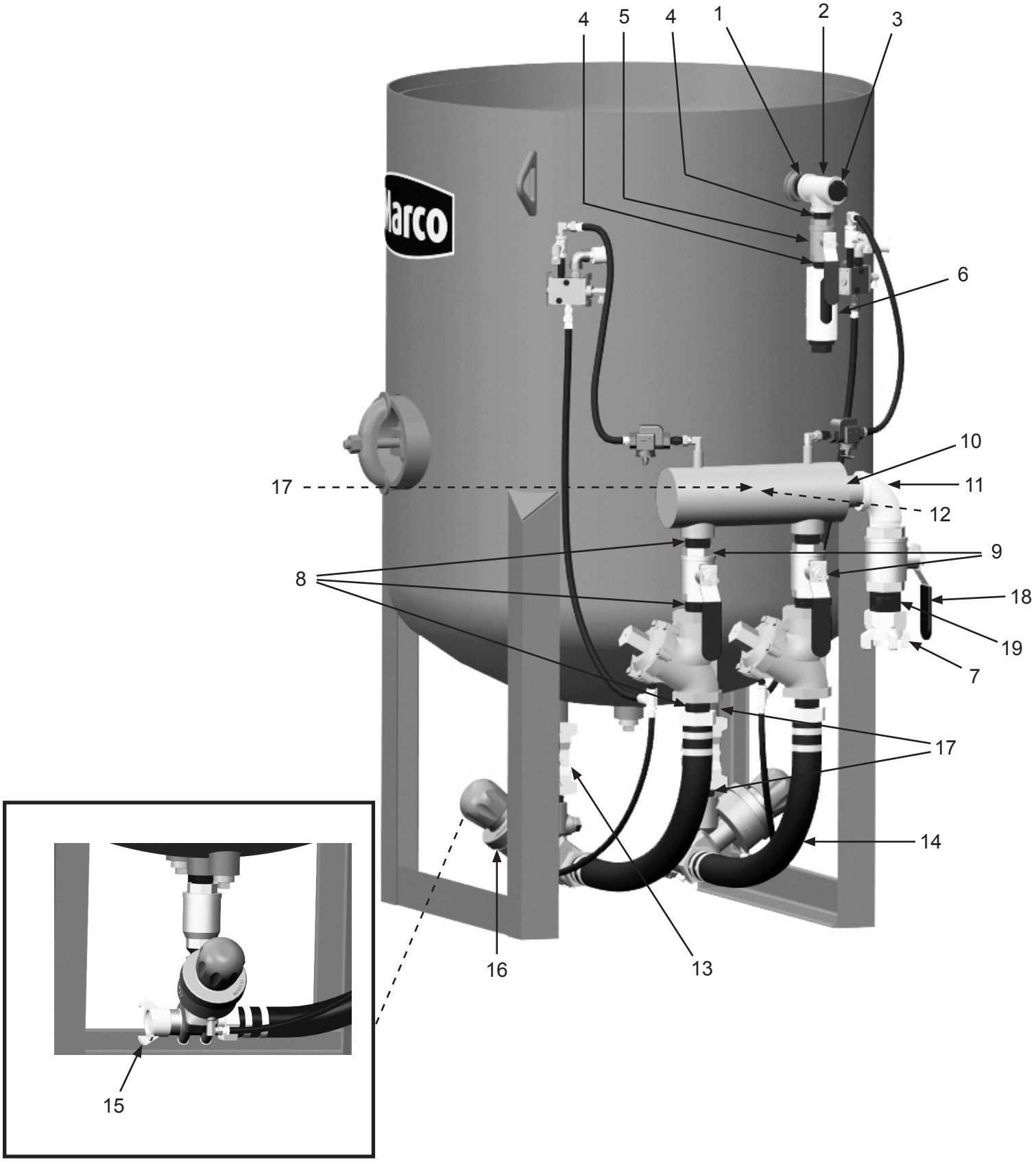

PART NUMBERS AND SCHEMATICS

20 Cu. Ft. Abrasive Blasting Pots – 12-Volt DC – Dual Outlet

Item #	Part #	Description
Fig. 7		
—	**10107013**	**20 Cu. Ft. Abrasive Blasting Pots – 12-Volt DC – Dual Outlet – Tungsten Carbide**
—	**10107015**	**20 Cu. Ft. Abrasive Blasting Pots – 12-Volt DC – Dual Outlet – Urethane**
1	1011201	1-1/4" NPT Close Nipple
2	1011817	1-1/4" x 1-1/4" x 1" Pipe Tee
3	1011902	1-1/4" Square Head Plug
4	1012151	1" Galvanized Close Nipple *(Two Required)*
5	1011601	1" NPT Full Port Brass Ball Valve
6	1011100	Exhaust Muffler Assembly *(See Figure 15)*
7	10ME5	2" NPT (F) 4-Lug Air Hose Coupling
8	1014015	1-1/2" Close Nipple *(Six Required)*
9	1011603	1-1/2" NPT Full Port Brass Ball Valve *(Two Required)*
10	10106863	Manifold
11	10101265	2" x 90° Elbow
12	1006502	1-1/4" Female Pipe Union
13	1011606A	1-1/4" Ball Valve
14	—	1-1/2" Pusher Line Assembly *(See Figure 14)*
15	10SB2S	1-1/2" Straight Thread Coupling
16	10101946	Maxum III Valve 1-1/2" Urethane
—	10101950	Maxum III Valve 1-1/2" Tungsten Carbide
17	1011201	1-1/4" Closed Nipple *(Five Required)*
18	1011604	2" NPT Full Port Brass Ball Valve
19	1001806	2" Close Nipple
20	1011902	1-1/4" Plug
—	10103835	130E Remote Control System *(Two Required)*
—	1091020	Warning Plate
—	1091025	Hazard Identification Tag
—	1091045	Hazard Identification Tag

PART NUMBERS AND SCHEMATICS

Figure 7: 20 Cu. Ft. Abrasive Blasting Pots – 12-Volt DC – Dual Outlet

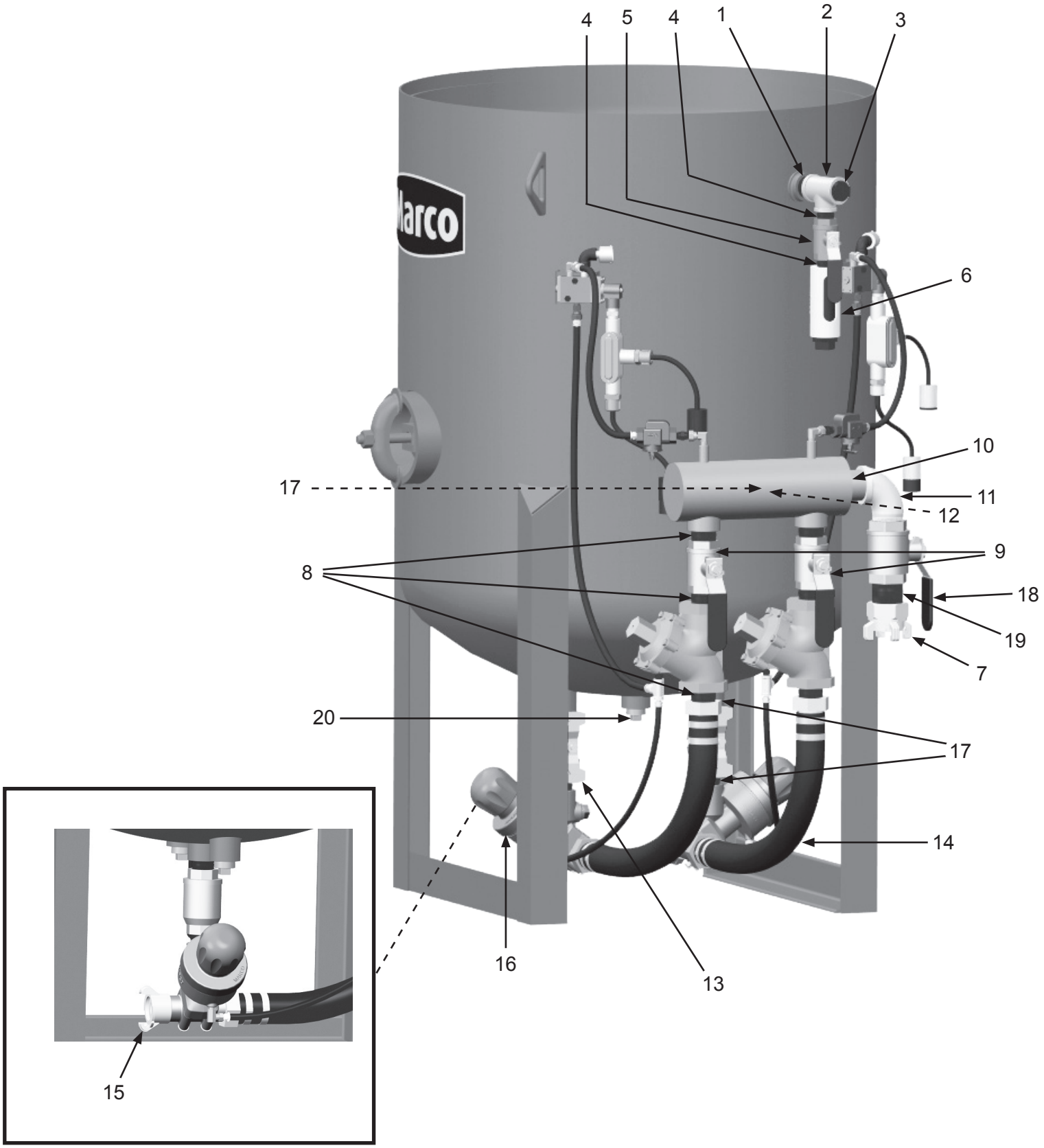

PART NUMBERS AND SCHEMATICS

20 Cu. Ft. Abrasive Blasting Pots – 120-Volt AC – Dual Outlet

Item #	Part #	Description
Fig. 8		
—	**10107017**	**20 Cu. Ft. Abrasive Blasting Pots – 120-Volt AC – Dual Outlet – Tungsten Carbide**
—	**10107019**	**20 Cu. Ft. Abrasive Blasting Pots – 120-Volt AC – Dual Outlet – Urethane**
1	1011201	1-1/4" NPT Close Nipple
2	1011817	1-1/4" x 1-1/4" x 1" Pipe Tee
3	1011902	1-1/4" Square Head Plug
4	1012151	1" Galvanized Close Nipple *(Two Required)*
5	1011601	1" NPT Full Port Brass Ball Valve
6	1011100	Exhaust Muffler Assembly *(See Figure 15)*
7	10ME5	2" NPT (F) 4-Lug Air Hose Coupling
8	1014015	1-1/2" Close Nipple *(Six Required)*
9	1011603	1-1/2" NPT Full Port Brass Ball Valve *(Two Required)*
10	10106863	Manifold
11	10101265	2" x 90° Elbow
12	1006502	1-1/4" Female Pipe Union
13	1011606A	1-1/4" Ball Valve
14	—	1-1/2" Pusher Line Assembly *(See Figure 14)*
15	10SB2S	1-1/2" Straight Thread Coupling
16	10101946	Maxum III Valve 1-1/2" Urethane
—	10101950	Maxum III Valve 1-1/2" Tungsten Carbide
17	1011201	1-1/4" Closed Nipple *(Five Required)*
18	1011604	2" NPT Full Port Brass Ball Valve
19	1001806	2" Close Nipple
20	1012323	1/4-20 Zinc Lock Nut with Nylon Insert *(Two Required)*
21	1030020	Marco® 120VAC-12VAC Converter *(Optional)*
22	1012154	1/4-20 x 1" Hex Bolt *(Four Required)*
23	1014017	1/4" Flat Washer *(Four Required)*
24	1011902	1-1/4" Plug
—	10103835	130E Remote Control System *(Two Required)*
—	1091020	Warning Plate
—	1091025	Hazard Identification Tag
—	1091045	Hazard Identification Tag

PART NUMBERS AND SCHEMATICS

Figure 8: 20 Cu. Ft. Abrasive Blasting Pots – 120-Volt AC – Dual Outlet

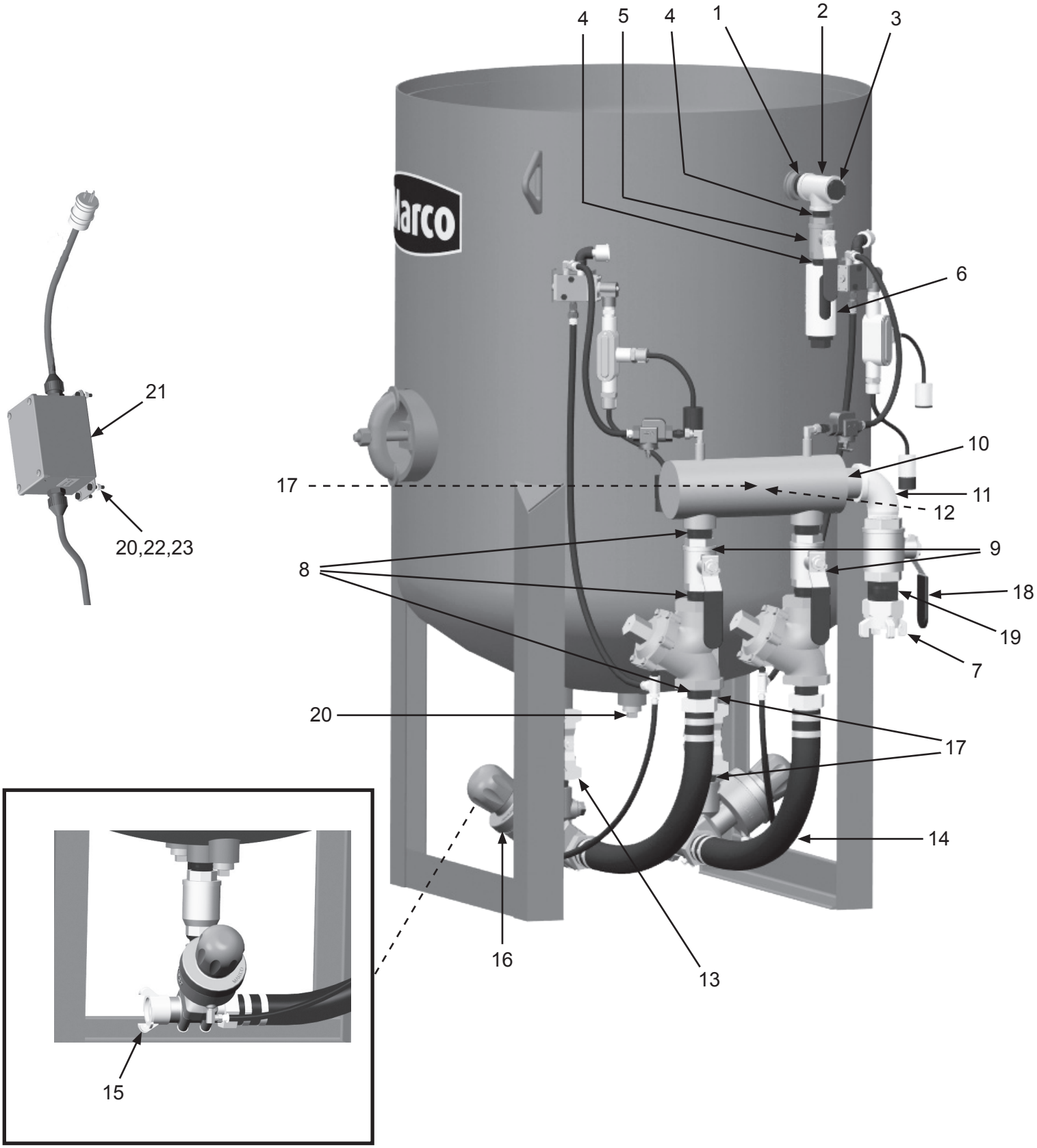

PART NUMBERS AND SCHEMATICS

20 Cu. Ft. Abrasive Blasting Pots – 800 CFM Moisture Separator – Pneumatic – Dual Outlet

Item #	Part #	Description
Fig. 9		
—	**10106849**	**20 Cu. Ft. Abrasive Blasting Pots – 800 CFM Moisture Separator – Pneumatic – Dual Outlet – Tungsten Carbide**
—	**10107506**	**20 Cu. Ft. Abrasive Blasting Pots – 800 CFM Moisture Separator – Pneumatic – Dual Outlet – Urethane**
1	1011201	1-1/4" Close Nipple – Galvanized *(Nine Required)*
2	10108570	1-1/4" Flange *(Two Required)*
3	10101171	Bracket
4	10101941	1/2-13 Hex Nut – Galvanized *(12 Required)*
5	10100675	1/2" Lock Washer *(12 Required)*
6	10100674	1/2" Flat Washer *(12 Required)*
7	10100597	1/2-13 x 1-1/4" Unc Hex Bolt *(Eight Required)*
8	1011786	1/2"-13 x 2-1/4" Cap Screw *(Four Required)*
9	10108571	1-1/4" Flange Gasket
10	10106851	800 CFM Moisture Separator
11	1011902	1-1/4" NPT Square Head Pipe Plug *(Two Required)*
12	10100559	2 Outlet Electrical Control Box
13	1011828	1-1/2" 90° Elbow with 1/2" Out *(Two Required)*
14	1014015	1-1/2" Close Nipple *(Four Required)*
15	1001806	2" Close Nipple *(Two Required)*
16	10ME5	2" NPT (F) 4-Lug Air Hose Coupling
17	1011604	2" Full Port Ball Valve
18	10PVFIT1	1/4" x 1/8" Hex Union *(Two Required)*
19	1011844	1/4" Pipe Tee – Galvanized *(Two Required)*
20	10PAF025	Push On Fitting 1/4" x 1/4" NPT *(12 Required)*
21	1011606A	1-1/4" Union End Ball Valve *(Two Required)*
22	10SB2S	1-1/2" Straight Thread Pot Coupling *(Two Required)*
23	—	1-1/2" Pusher Line Assembly *(Two Required) (See Figure 14)*
24	1013600	Gatekeeper Air Valve High Flow *(Two Required)*
25	1011603	1-1/2" Full Port Ball Valve *(Two Required)*
26	1012326	90° Swivel 1/4" x 1/4" *(Two Required)*
27	1011818	1/2" x 1/4" Galvanized Bushing *(Three Required)*
28	1011601	1" Full Port Ball Valve
29	1011817	1-1/4" x 1-1/4" x 1" Pipe Tee
30	1012151	1" Galvanized Close Nipple *(Two Required)*
31	1011100	Exhaust Muffler Assembly *(See Figure 15)*
32	10AH025	Push On Air Hose 1/4" I.D. 250 psi
33	10101946	Maxum III Valve 1-1/2" Urethane *(Two Required)*
—	10101950	Maxum III Valve 1-1/2" Tungsten Carbide *(Two Required)*
34	1011820	1-1/4" x 1/2" Bushing – Galvanized
35	1080050	1/4" Ball Valve
36	1017019	Hex Nipple 1/4" x 1/4" *(Three Required)*
—	10103834	130P Remote Control System *(Two Required)*
—	1091020	Warning Plate
—	1091025	Hazard Identification Tag
—	1091045	Hazard Identification Tag

Figure 9: 20 Cu. Ft. Abrasive Blasting Pots – 800 CFM Moisture Separator – Pneumatic – Dual Outlet

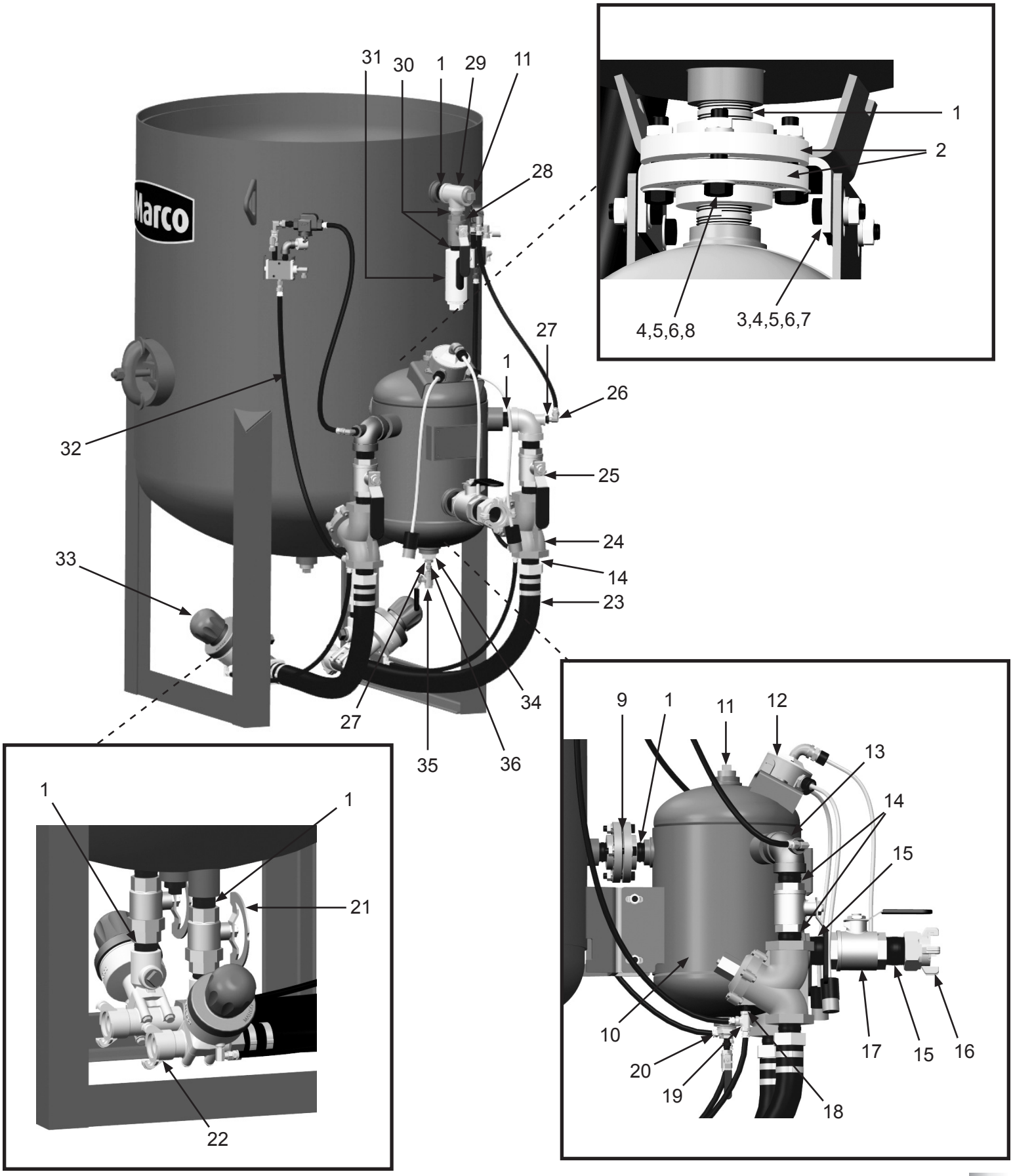

PART NUMBERS AND SCHEMATICS

20 Cu. Ft. Abrasive Blasting Pots – 800 Moisture Separator – 12-Volt DC – Dual Outlet

Item #	Part #	Description
Fig. 10		
—	**10106850**	**20 Cu. Ft. Abrasive Blasting Pots - 800 Moisture Separator – 12-Volt DC – Dual Outlet – Tungsten Carbide**
—	**10107507**	**20 Cu. Ft. Abrasive Blasting Pots – 800 Moisture Separator – 12-Volt DC – Dual Outlet – Urethane**
1	1011201	1-1/4" Close Nipple – Galvanized *(Nine Required)*
2	10108570	1-1/4" Flange *(Two Required)*
3	10101171	Bracket
4	10101941	1/2-13 Hex Nut – Galvanized *(12 Required)*
5	10100675	1/2" Lock Washer *(12 Required)*
6	10100674	1/2" Flat Washer *(12 Required)*
7	10100597	1/2-13 x 1-1/4" Hex Bolt *(Eight Required)*
8	1011786	1/2-13 x 2-1/4" Cap Screw *(Four Required)*
9	10108571	1-1/4" Flange Gasket
10	10106851	800 CFM Moisture Separator
11	1011902	1-1/4" NPT Square Head Pipe Plug *(Two Required)*
12	10100559	2 Outlet Electrical Control Box
13	1011828	1-1/2" 90° Elbow with 1/2" Out *(Two Required)*
14	1014015	1-1/2" Close Nipple *(Four Required)*
15	1001806	2" Close Nipple *(Two Required)*
16	10ME5	2" NPT (F) 4-Lug Air Hose Coupling
17	1011604	2" Full Port Ball Valve
18	10PVFIT1	1/4" x 1/8" Hex Union *(Two Required)*
19	1011844	1/4" Pipe Tee - Galvanized *(Two Required)*
20	10PAF025	Push On Fitting 1/4" x 1/4" NPT *(12 Required)*
21	1011606A	1-1/4" Union End Ball Valve *(Two Required)*
22	10SB2S	1-1/2" Straight Thread Pot Coupling *(Two Required)*
23	—	1-1/2" Pusher Line Assembly *(Two Required) (See Figure 14)*
24	1013600	Gatekeeper Air Valve High Flow *(Two Required)*
25	1011603	1-1/2" Full Port Ball Valve *(Two Required)*
26	1012326	90° Swivel 1/4" x 1/4" *(Two Required)*
27	1011818	1/2" x 1/4" Galvanized Bushing *(Three Required)*
28	1011601	1" Full Port Ball Valve
29	1011817	1-1/4" x 1-1/4" x 1" Pipe Tee
30	1012151	1" Galvanized Close Nipple *(Two Required)*
31	1011100	Exhaust Muffler Assembly *(See Figure 15)*
32	10AH025	1/4" I.D. Push On Air Hose
33	10101946	Maxum III Valve 1-1/2" Urethane *(Two Required)*
—	10101950	Maxum III Valve 1-1/2" Tungsten Carbide *(Two Required)*
34	1011820	1-1/4" x 1/2" Bushing – Galvanized
35	1080050	1/4" Ball Valve
36	1017019	Hex Nipple 1/4" x 1/4" *(Three Required)*
—	10103835	130E Remote Control System *(Two Required)*
—	1091020	Warning Plate
—	1091025	Hazard Identification Tag
—	1091045	Hazard Identification Tag

Figure 10: 20 Cu. Ft. Abrasive Blasting Pots – 800 Moisture Separator – 12-Volt DC – Dual Outlet

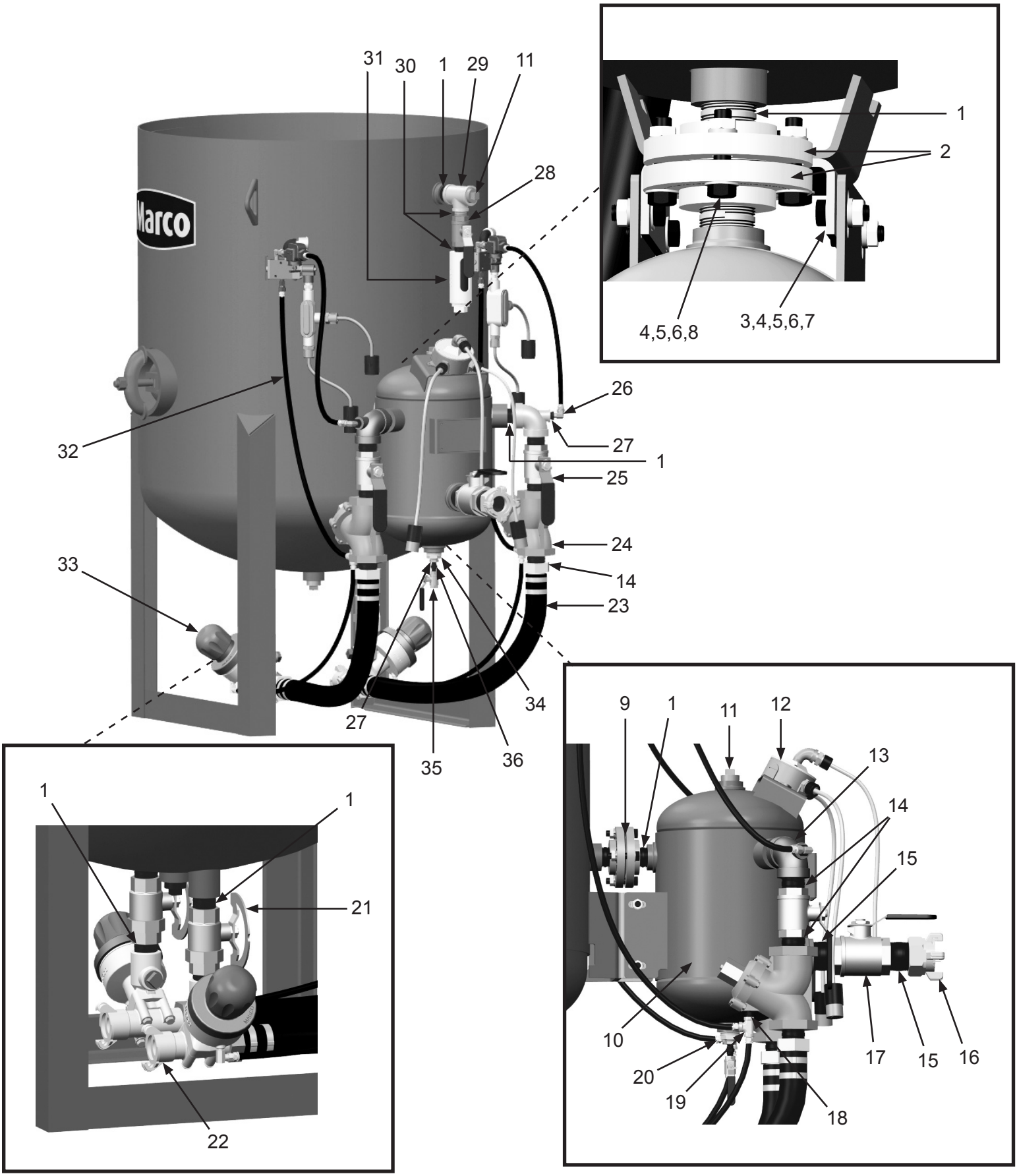

PART NUMBERS AND SCHEMATICS

20 Cu. Ft. Abrasive Blasting Pots – 800 Moisture Separator – 120-Volt AC – Dual Outlet

Item #	Part #	Description
Fig. 11		
—	**10107508**	**20 Cu. Ft. Abrasive Blasting Pots – 800 Moisture Separator – 120-Volt AC - Dual Outlet – Tungsten Carbide**
—	**10107509**	**20 Cu. Ft. Abrasive Blasting Pots – 800 Moisture Separator – 120-Volt AC – Dual Outlet – Urethane**
1	1011201	1-1/4" Close Nipple – Galvanized *(Nine Required)*
2	10108570	1-1/4" Flange *(Two Required)*
3	10101171	Bracket
4	10101941	1/2-13 Hex Nut – Galvanized *(12 Required)*
5	10100675	1/2" Lock Washer *(12 Required)*
6	10100674	1/2" Flat Washer *(12 Required)*
7	10100597	1/2-13 x 1-1/4" Unc Hex Bolt *(Eight Required)*
8	1011786	1/2-13 x 2-1/4" Cap Screw *(Four Required)*
9	10108571	1-1/4" Flange Gasket
10	10106851	800 CFM Moisture Separator
11	1011902	1-1/4" NPT Square Head Pipe Plug *(Two Required)*
12	10100559	2 Outlet Electrical Control Box
13	1011828	1-1/2" 90° Elbow with 1/2" Out *(Two Required)*
14	1014015	1-1/2" Close Nipple *(Four Required)*
15	1001806	2" Close Nipple *(Two Required)*
16	10ME5	2" NPT (F) 4-Lug Air Hose Coupling
17	1011604	2" Full Port Ball Valve
18	10PVFIT1	1/4" x 1/8" Hex Union *(Two Required)*
19	1011844	1/4" Pipe Tee – Galvanized *(Two Required)*
20	10PAF025	Push On Fitting 1/4" x 1/4" NPT *(12 Required)*
21	1011606A	1-1/4" Union End Ball Valve *(Two Required)*

Item #	Part #	Description
22	10SB2S	1-1/2" Straight Thread Pot Coupling *(Two Required)*
23	—	1-1/2" Pusher Line Assembly *(Two Required) (See Figure 14)*
24	1013600	Gatekeeper Air Valve High Flow *(Two Required)*
25	1011603	1-1/2" Full Port Ball Valve *(Two Required)*
26	1012326	90° Swivel 1/4" x 1/4" *(Two Required)*
27	1011818	1/2" x 1/4" Bushing *(Three Required)*
28	1011601	1" Full Port Ball Valve
29	1011817	1-1/4" x 1-1/4" x 1" Pipe Tee
30	1012151	1" Close Nipple *(Two Required)*
31	1011100	Muffler Assembly *(See Figure 15)*
32	10AH025	Push On Air Hose 1/4" I.D. 250 psi
33	10101946	Maxum III Valve 1-1/2" Urethane *(Two Required)*
—	10101950	Maxum III Valve 1-1/2" Tungsten Carbide *(Two Required)*
34	1011820	1-1/4" x 1/2" Bushing – Galvanized
35	1080050	1/4" Ball Valve
36	1017019	Hex Nipple 1/4" x 1/4" *(Three Required)*
37	1012323	1/4-20 Zinc Lock Nut with Nylon Insert *(Two Required)*
38	1030020	Marco® 120VAC – 12VAC Converter *(Optional)*
39	12154	1/4-20 x 1" Hex Bolt *(Four Required)*
40	1014017	1/4" Flat Washer *(Four Required)*
—	10103835	130E Remote Control System *(Two Required)*
—	1091020	Warning Plate
—	1091025	Hazard Identification Tag
—	1091045	Hazard Identification Tag

Figure 11: 20 Cu. Ft. Abrasive Blasting Pots – 800 Moisture Separator – 120-Volt AC – Dual Outlet

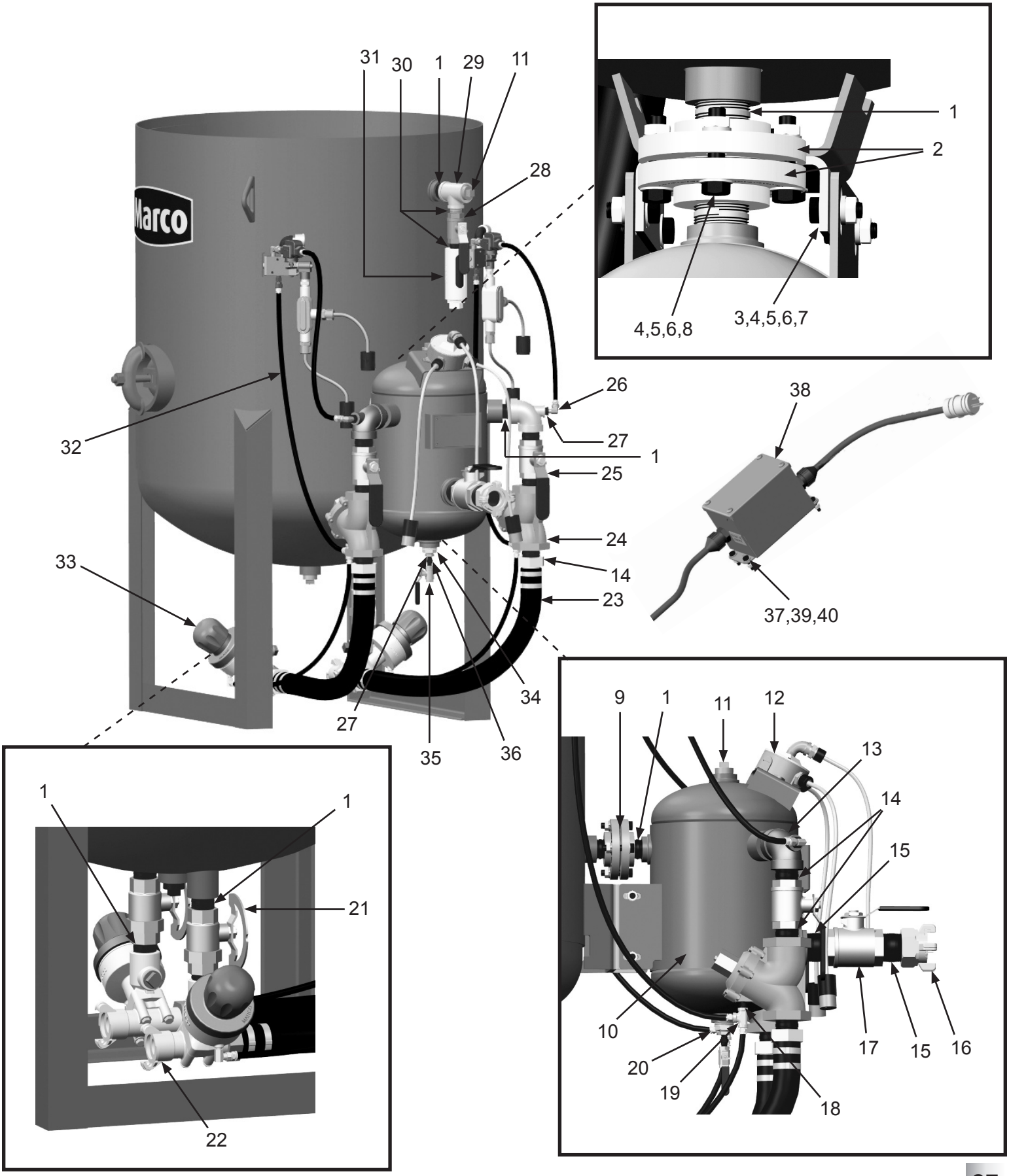

PART NUMBERS AND SCHEMATICS

20 Cu. Ft. Abrasive Blasting Pots – Pneumatic – Dual Outlet – Pressure Release

Item #	Part #	Description
Fig. 12		
—	**10108353**	**20 Cu. Ft. Abrasive Blasting Pots – Pneumatic – Dual Outlet – Tungsten Carbide**
—	**10109057**	**20 Cu. Ft. Abrasive Blasting Pots – Pneumatic – Dual Outlet – Urethane**
1	1011201	1-1/4" Close Nipple – Galvanized *(Seven Required)*
2	1011817	1-1/4" x 1-1/4" x 1" Pipe Tee
3	1011902	1-1/4" Square Head Plug *(Two Required)*
4	1012151	1" Galvanized Close Nipple
5	1012157	1-1/4" x 1" NPT Bushing
6	10AH025	Push On Air Hose 1/4" I.D. 250 psi
7	10101265	2" x 90° Elbow
8	1011604	2" NPT Full Port Brass Ball Valve
9	1001806	2" Close Nipple
10	10ME5	2" NPT (F) 4-Lug Air Hose Coupling
11	1013600	1-1/2" NPT High-flow GateKeeper Air Valve *(Two Required) (See Figure 21)*
12	1014015	1-1/2" Close Nipple *(Six Required)*
13	—	1-1/2" Pusher Line Assembly *(See Figure 14)*
14	1011606A	1-1/4" Union End Ball Valve *(Two Required)*
15	10PAF025	Push On Fitting 1/4" x 1/4" NPT *(14 Required)*
16	1014239	1/8" 90° Swivel Fitting *(Four Required)*
17	10101946	Maxum III Valve 1-1/2" Urethane *(Two Required)*
—	10101950	Maxum III Valve 1-1/2" Tungsten Carbide *(Two Required)*
18	10SB2S	1-1/2" Straight Thread Coupling *(Two Required)*
19	1011603	1-1/2" NPT Full Port Brass Ball Valve *(Two Required)*
20	1017019	Hex Nipple 1/4" x 1/4" *(Eight Required)*
21	10WS	Watts Strainer *(Two Required)*
22	1012326	90° Swivel 1/4" x 1/4" *(Four Required)*
23	1011844	1/4" Pipe Tee – Galvanized *(Six Required)*
24	10SME025	1/4" Straight Swivel *(Two Required)*
25	10106863	Manifold
26	1019044	1/4-20 x 1-3/4" Zinc Bolt *(Four Required)*
27	1012323	1/4-20 Zinc Lock Nut with Nylon Insert *(Four Required)*
28	1011217	1/4" x 2" Pipe Nipple *(Two Required)*
29	1011832	1/4" NPT 90° Pipe Nipple *(Two Required)*
30	10DE025	Dust Eliminator *(Two Required)*
31	1011802	1-1/4" Steet Elbow *(Three Required)*
32	1006502	1-1/4" Female Pipe Union
33	1019000	190 Pneumatic Solenoid *(See Figure 33) (Two Required)*
34	10PVFIT1	1/4" x 1/8" Hex Union
35	1070747	1/4" NPT Shuttle Valve
36	10105718	1/4" Hollow Hex Plug
37	10PAF0125	1/8" NPT x 1/4" Barb Push-On Air Hose Fitting *(Two Required)*
—	1012351	123P Remote Control System
—	1091020	Warning Plate
—	1091025	Hazard Identification Tag
—	1091045	Hazard Identification Tag

Figure 12: 20 Cu. Ft. Abrasive Blasting Pots – Pneumatic – Dual Outlet – Pressure Release

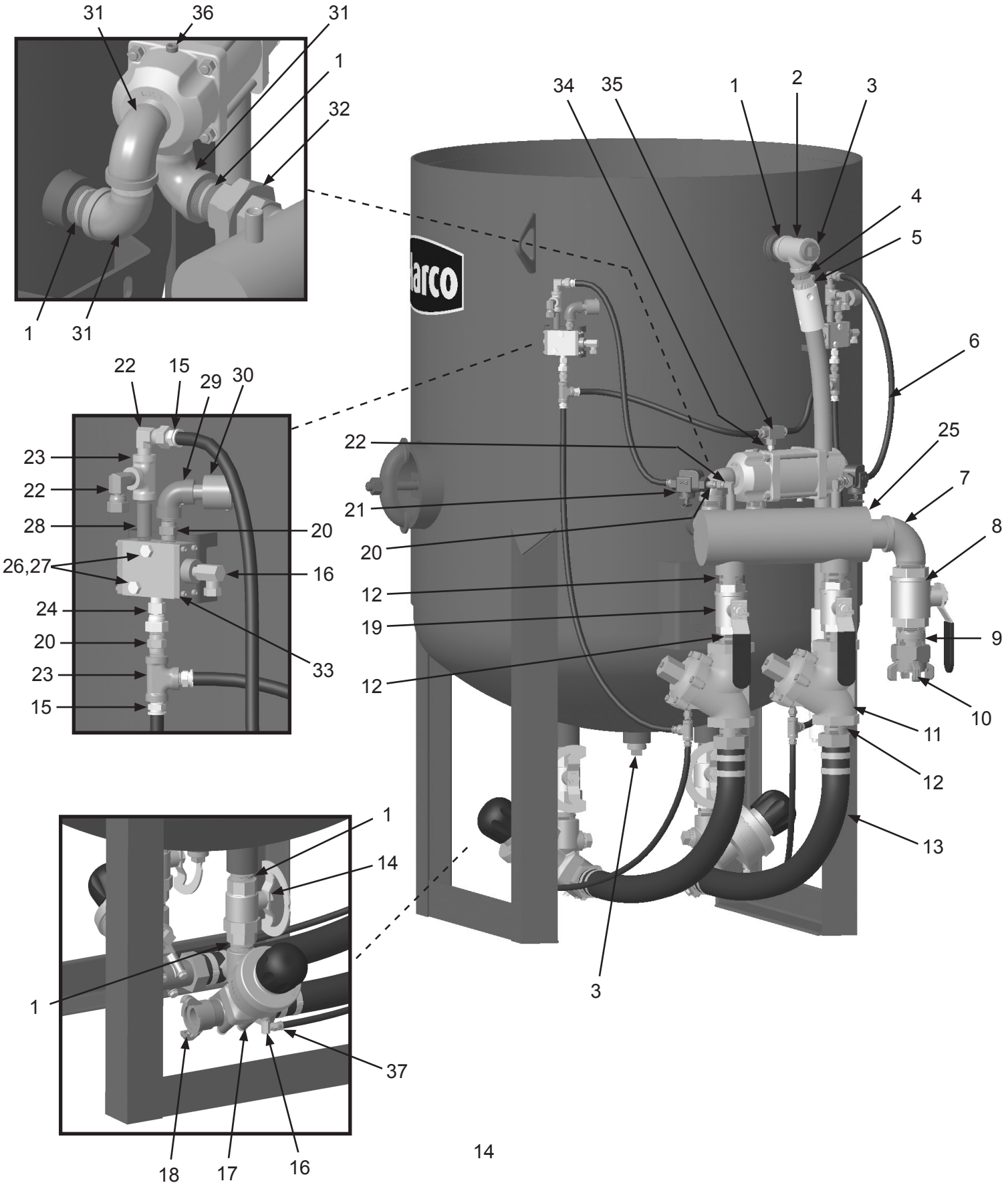

PART NUMBERS AND SCHEMATICS

20 Cu. Ft. Abrasive Blasting Pots – 12 Volt DC – Dual Outlet – Pressure Release

Item #	Part #	Description
Fig. 13		
—	**10109007**	**20 Cu. Ft. Abrasive Blasting Pots – 12-Volt DC – Dual Outlet – Tungsten Carbide**
1	1011201	1-1/4" Close Nipple – Galvanized *(Seven Required)*
2	1011817	1-1/4" x 1-1/4" x 1" Pipe Tee
3	1011902	1-1/4" Square Head Plug *(Two Required)*
4	1012151	1" Galvanized Close Nipple
5	1012157	1-1/4" x 1" NPT Bushing
6	10AH025	Push On Air Hose 1/4" I.D. 250 psi
7	10101265	2" x 90° Elbow
8	1011604	2" NPT Full Port Brass Ball Valve
9	1001806	2" Close Nipple
10	10ME5	2" NPT (F) 4-Lug Air Hose Coupling
11	1013600	1-1/2" NPT High-flow GateKeeper Air Valve *(Two Required) (See Figure 21)*
12	1014015	1-1/2" Close Nipple *(Six Required)*
13	—	1-1/2" Pusher Line Assembly *(See Figure 14)*
14	1011606A	1-1/4" Union End Ball Valve *(Two Required)*
15	10PAF025	Push On Fitting 1/4" x 1/4" NPT *(14 Required)*
16	1014239	1/8" 90° Swivel Fitting *(Four Required)*
17	10101946	Maxum III Valve 1-1/2" Urethane *(Two Required)*
—	10101950	Maxum III Valve 1-1/2" Tungsten Carbide *(Two Required)*
18	10SB2S	1-1/2" Straight Thread Coupling *(Two Required)*
19	1011603	1-1/2" NPT Full Port Brass Ball Valve *(Two Required)*
20	1017019	Hex Nipple 1/4" x 1/4" *(Eight Required)*
21	10WS	Watts Strainer *(Two Required)*

Item #	Part #	Description
22	1012326	90° Swivel 1/4" x 1/4" *(Four Required)*
23	10106863	Manifold
24	1019044	1/4-20 x 1-3/4" Zinc Bolt *(Four Required)*
25	1012323	1/4-20 Zinc Lock Nut with Nylon Insert *(Four Required)*
26	1011802	1-1/4" Steet Elbow *(Three Required)*
27	1006502	1-1/4" Female Pipe Union
28	10PVFIT1	1/4" x 1/8" Hex Union
29	1070747	1/4" NPT Shuttle Valve
30	10105718	1/4" Hollow Hex Plug
31	10PAF0125	1/8" NPT x 1/4" Barb Push-On Air Hose Fitting *(Two Required)*
32	1011844	1/4" Pipe Tee – Galvanized *(Four Required)*
—	1012352	123E Remote Control System
—	1091020	Warning Plate
—	1091025	Hazard Identification Tag
—	1091045	Hazard Identification Tag

Figure 13: 20 Cu. Ft. Abrasive Blasting Pots – 12-Volt DC – Dual Outlet – Pressure Release

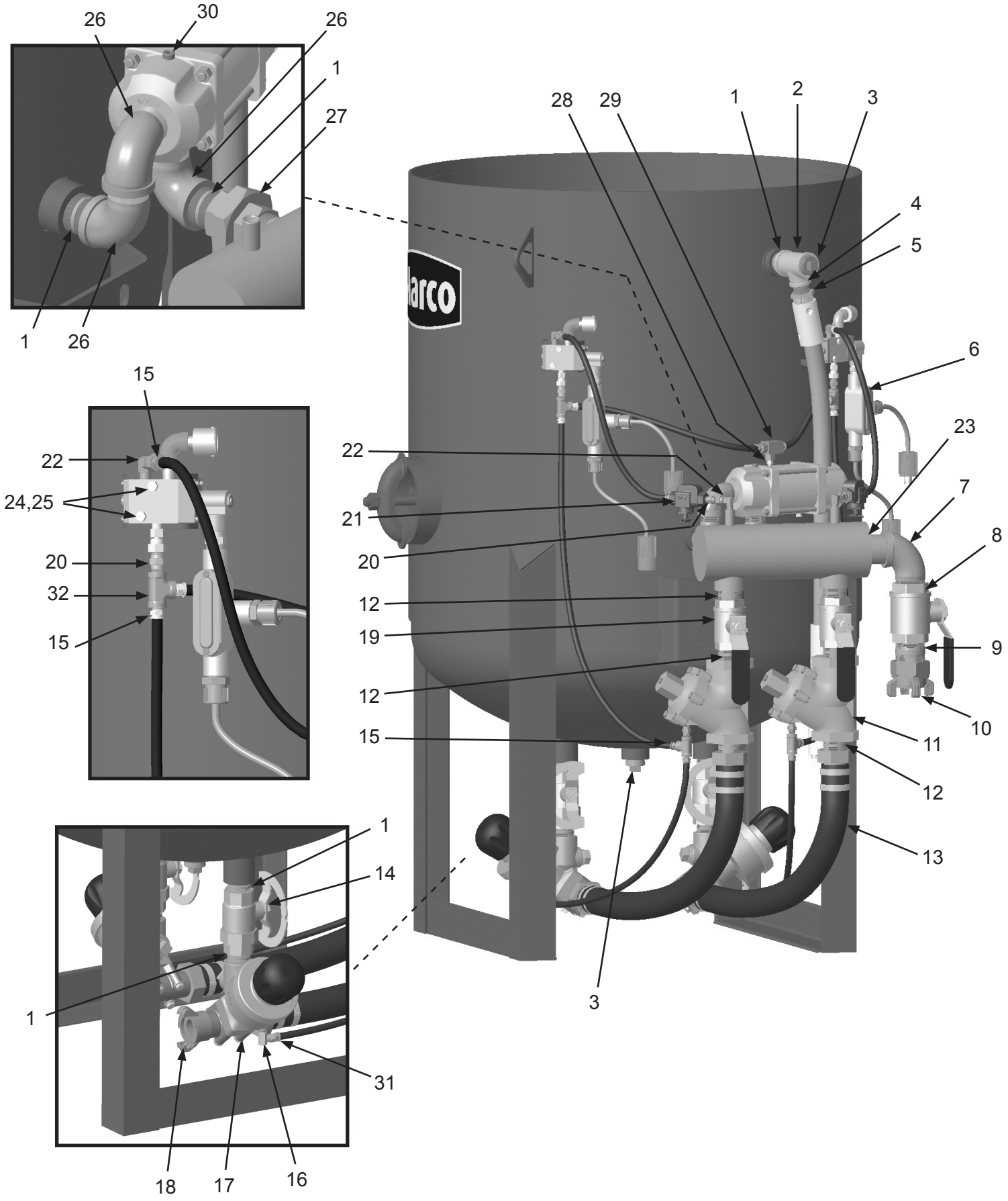

Figure 14: Pusher Line Assembly

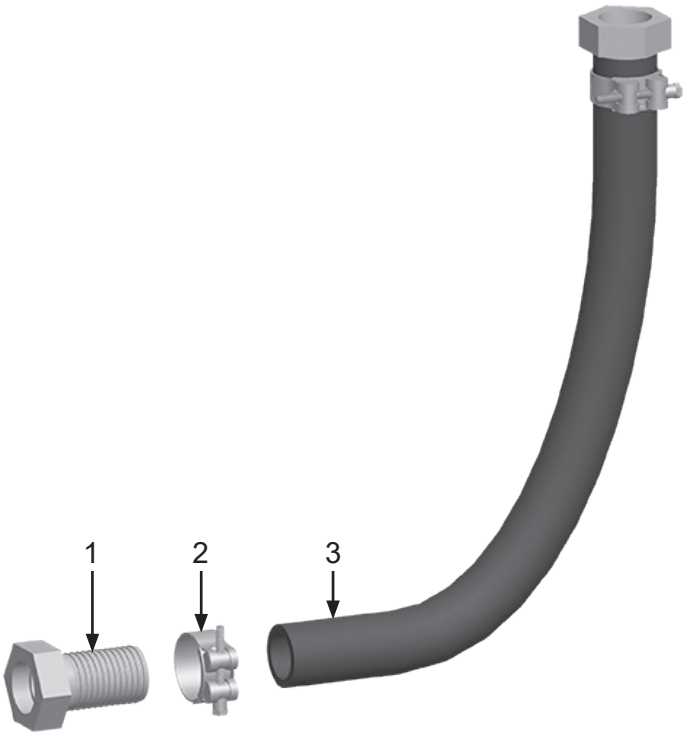

Item #	Part #	Description
Fig. 14		
—	**1006312**	**1-1/2" I.D. Pusher Line Assembly** *Includes Item #: 1, 2, and 3 (Quantity of Three Feet)*
1	10SFE4	1-1/2" Female Swivel Air Hose End *(Two Required)*
2	10103738	1-1/2" T-Bolt Hose Clamp *(Two Required)*
3	10AH112B	1-1/2" I.D. Air Hose
—	10SFE4G	Gasket for 10SFE4 Swivel Air Hose End *(Not Shown)*
—	1090059	Technical Data Sheet – Pusher Line Assemblies

Figure 15: Exhaust Muffler Assembly

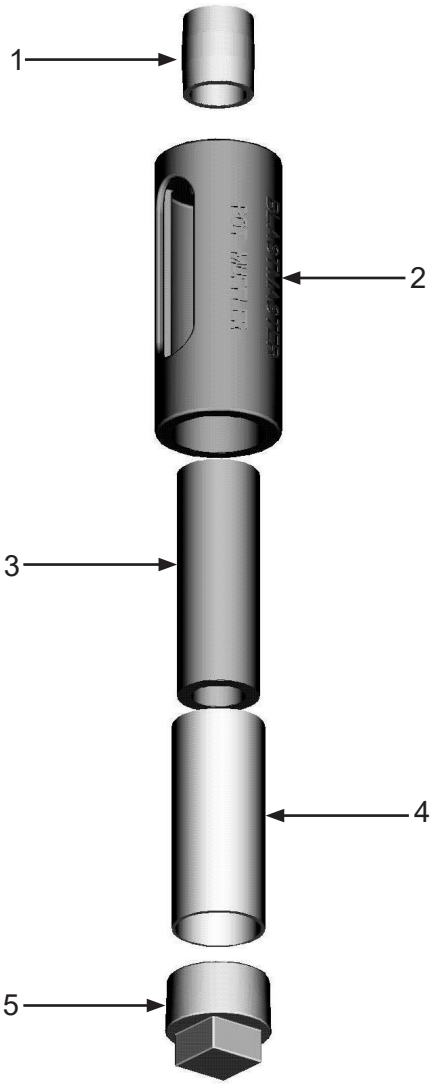

Item #	Part #	Description
Fig. 15		
—	**1011100**	**Blast Pot Exhaust Muffler – Complete**
1	1012151	1" Close Nipple
2	1011102	Body
3	1011103	Filter Element
4	1011104	Screen
5	1011101	1-1/2" Pipe Plug
—	1011105	Blast Pot Exhaust Muffler Service Kit *Includes Item #'s: 3 (Quantity of 3), 4, and 5*
—	106M347	Part Numbers and Schematics Guide – Blast Pot Exhaust Muffler

PART NUMBERS AND SCHEMATICS

Marco® Maxum III Abrasive Metering Valve

Item #	Part #	Description
Fig. 16		
—	**10101949**	**1-1/4" Marco® Maxum III Abrasive Metering Valve – Tungsten Carbide Sleeve – Complete**
—	**10105907**	**1-1/4" Marco® Maxum III Abrasive Metering Valve – Multi-port Sleeve – Complete**
—	**10101950**	**1-1/2" Marco® Maxum III Abrasive Metering Valve – Tungsten Carbide Sleeve – Complete**
—	**10105908**	**1-1/2" Marco® Maxum III Abrasive Metering Valve – Multi-port Sleeve – Complete**
1	10101969	Knob
2	1012905	1/8" Breather Muffler *(Two Required)*
3	1014211	Cap
4	10106831	Vibration Disc
5	1014212	Bump Ring
6	1014213	Spring
7	1014022	1/2–13 Nut
8	1014215	Piston Seal
9	1014216	Piston
10	1014217	Tungsten Carbide Plunger
11	10101772	Body
12	1014240	3/32" x 3/8" Groove Pin
13	10103977	Heavy-Duty Plunger Seal
14	1014238	Tungsten Carbide Sleeve
—	10102123	Carbon Steel Sleeve- Multi-Port - *Optional (Orifice sizes: 0.178", 0.218", 0.278" and 0.343")*
15	1014237	Seat for Tungsten Carbide Sleeve
16	1014236	Insert for Tungsten Carbide Sleeve
17	1014235	O-ring for Tungsten Carbide Sleeve
18	1014241	3/8" Washer *(Four Required)*
19	10101933	3/8–16 x 2-1/2" Bolt *(Four Required)*
20a	10105907	1-1/4" Base, Through Hardened *(For use with 10101949)*
20b	10105908	1-1/2" Base, Through Hardened *(For use with 10101950)*
21	1011901	1" Square Pipe Plug
—	1014243	Repair Kit with Tungsten Carbide Sleeve *(Includes Item #'s: 8, 10, 13, 14, 15, 16, and 17)*
—	10105909	Repair Kit with Carbon Steel Multi-port Sleeve *(Includes Item #'s: 8, 10, 13, 14, 15, 16, and 17)*
—	1014221	Soft Seal Kit *(Includes Item #'s: 8,13,15 and 17)*
—	1091045	Hazard Identification Tag

Figure 16: Marco® Maxum III Abrasive Metering Valve

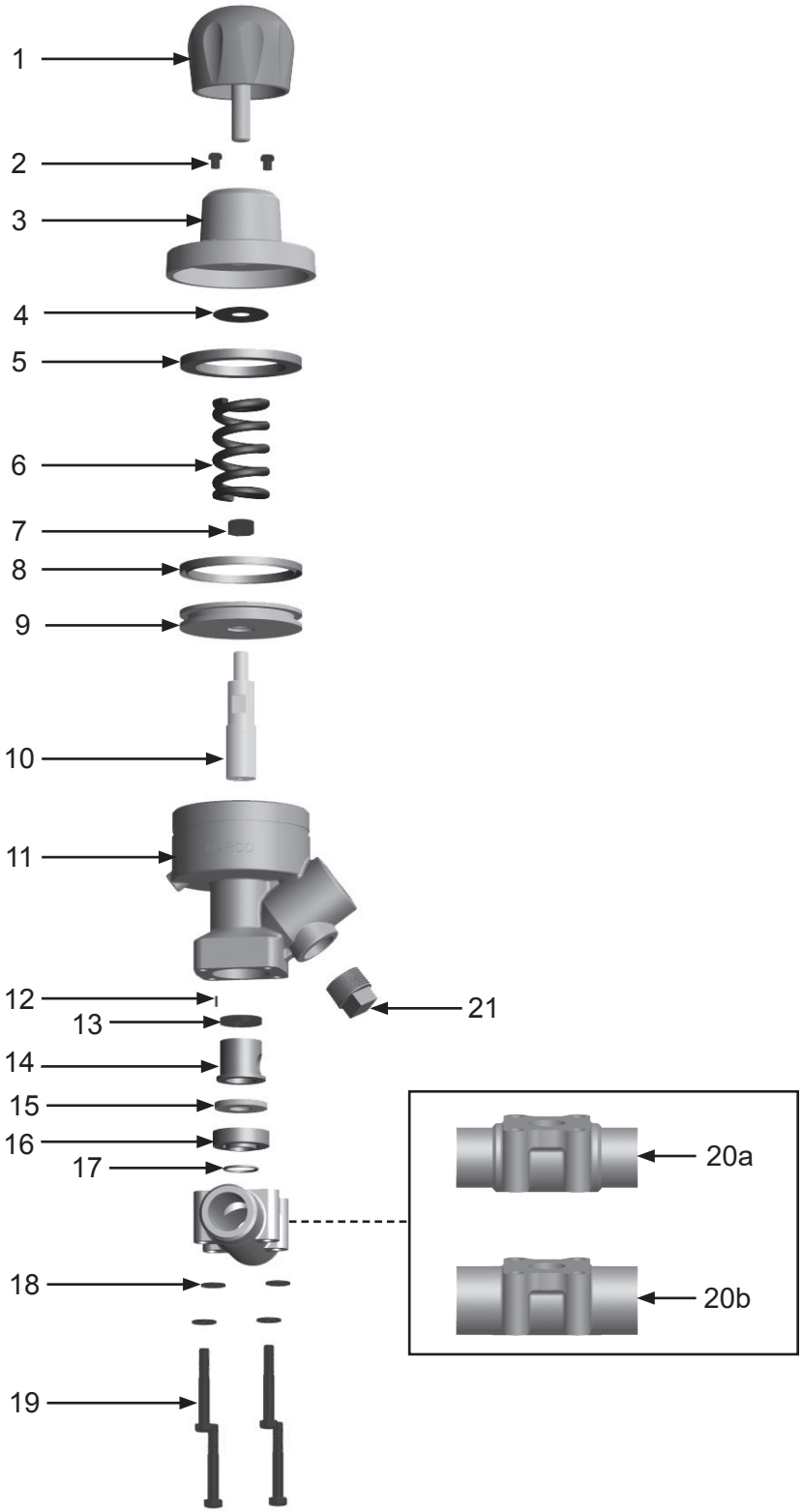

Marco® Maxum III Abrasive Metering Valve – Urethane Sleeve

Item #	Part #	Description
Fig. 17		
—	**10101945**	**1-1/4" Marco® Maxum III Abrasive Metering Valve – Urethane Sleeve – Complete**
—	**10101946**	**1-1/2" Marco® Maxum III Abrasive Metering Valve – Urethane Sleeve – Complete**
1	10101969	Knob
2	1012905	1/8" Breather Muffler *(Two Required)*
3	1014211	Cap
4	10106831	Vibration Disc
5	1014212	Bump Ring
6	1014213	Spring
7	1014022	1/2–13 Nut
8	1014215	Piston Seal
9	1014216	Piston
10	1014217	Tungsten Carbide Plunger
11	10101772	Body
12	1014240	3/32" x 3/8" Groove Pin
13	10103977	Heavy-Duty Plunger Seal
14	1014229	Urethane Sleeve
15	1014241	3/8" Washer *(Four Required)*
16	10101933	3/8–16 x 2-1/2" Bolt *(Four Required)*
17a	10000229	1-1/4" Base, Through Hardened *(For use with 10101945)*
17b	10000230	1-1/2" Base, Through Hardened *(For use with 10101946)*
18	1011901	1" Square Pipe Plug
—	1014244	Repair Kit with Urethane Sleeve *(Includes Item #'s: 8,10,13 and 14)*
—	1014222	Soft Seal Kit *(Includes Item #'s: 8,13, and 14)*
—	1091045	Hazard Identification Tag

Figure 17: Marco® Maxum III Abrasive Metering Valve – Urethane Sleeve

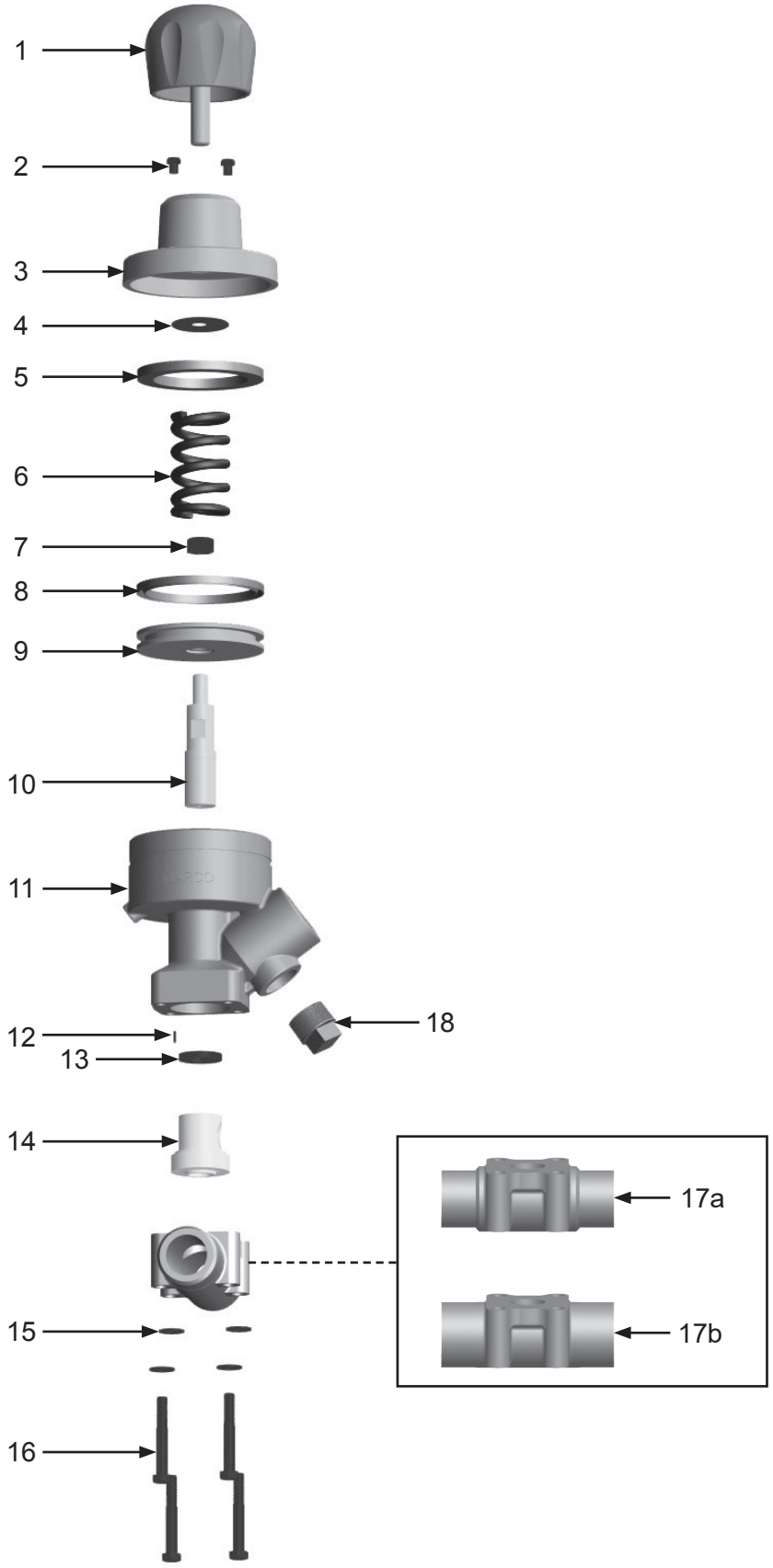

PART NUMBERS AND SCHEMATICS

Marco® Maxum III Abrasive Metering Valve — Tungsten Carbide Sleeve — 2”

Item #	Part #	Description
Fig. 18		
—	**10105872**	**2” Marco® Maxum III Abrasive Metering Valve – Tungsten Carbide Sleeve – Complete**
1	10101969	Knob
2	1012905	1/8" Breather Muffler *(Two Required)*
3	1014211	Cap
4	10106831	Vibration Disc
5	1014212	Bump Ring
6	1014213	Spring
7	1014022	1/2–13 Nut
8	1014215	Piston Seal
9	1014216	Piston
10	1014217	Tungsten Carbide Plunger
11	10101772	Body
12	1014240	3/32" x 3/8" Groove Pin
13	10103977	Heavy-Duty Plunger Seal
14	1014238	Tungsten Carbide Sleeve
15	1014237	Seat for Tungsten Carbide Sleeve
16	1014236	Insert for Tungsten Carbide Sleeve
17	1014235	O-ring for Tungsten Carbide Sleeve
18	10101936	3/8" Washer *(Four Required)*
19	10101938	3/8–16 Hex Nut *(Four Required)*
20	10105568	Adapter Plate
21	10105570	3/8-16 x 3/4” Socket Head Cap Screw *(Four Required)*
22	10105567	2” Base, Through Hardened *(For use with 10105573)*
23	1014241	3/8” Washer *(Four Required)*
24	10105569	3/8–16 x 3-3/4" Bolt *(Four Required)*
25	1011901	1" Square Pipe Plug
—	1014243	Repair Kit with Tungsten Carbide Sleeve *(Includes Item #'s: 8, 10, 13, 14, 15, 16, and 17)*
—	1014221	Soft Seal Kit *(Includes Item #'s: 8,13,15 and 17)*
—	1091045	Hazard Identification Tag

Figure 18: Marco® Maxum III Abrasive Metering Valve — Tungsten Carbide Sleeve — 2”

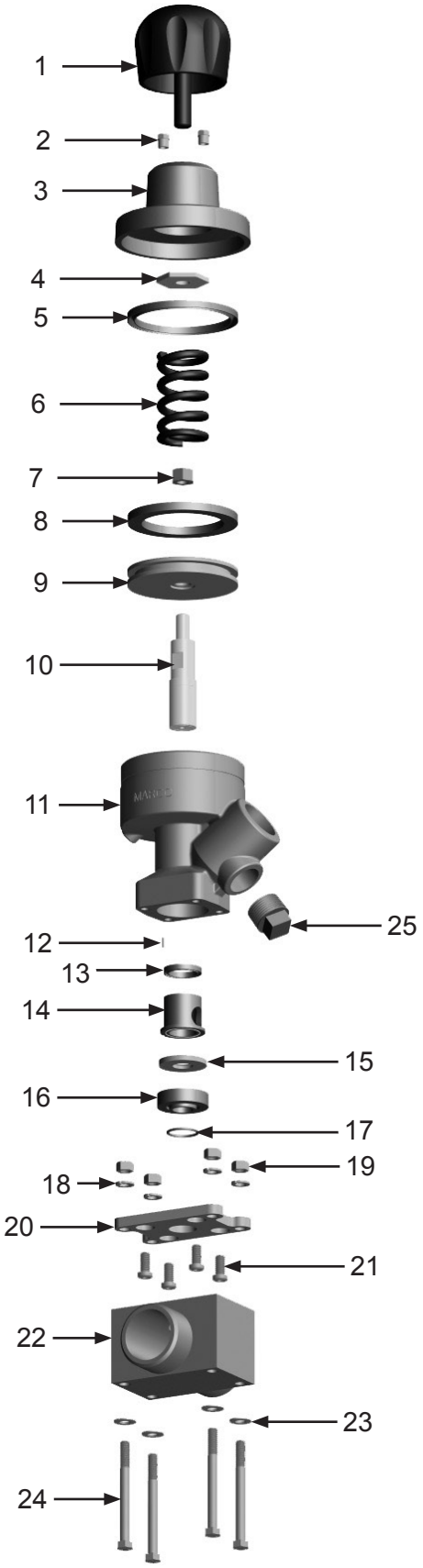

Marco® Maxum III Abrasive Metering Valve — Urethane Sleeve — 2”

Item #	Part #	Description
Fig. 19		
—	**10105573**	**2” Marco® Maxum III Abrasive Metering Valve – Urethane Sleeve – Complete**
1	10101969	Knob
2	1012905	1/8" Breather Muffler *(Two Required)*
3	1014211	Cap
4	10106831	Vibration Disc
5	1014212	Bump Ring
6	1014213	Spring
7	1014022	1/2–13 Nut
8	1014215	Piston Seal
9	1014216	Piston
10	1014217	Tungsten Carbide Plunger
11	10101772	Body
12	1014240	3/32" x 3/8" Groove Pin
13	10103977	Heavy-Duty Plunger Seal
14	1014229	Urethane Sleeve
15	10101936	3/8" Washer *(Four Required)*
16	10101938	3/8–16 Hex Nut *(Four Required)*
17	10105568	Adapter Plate
18	10105570	3/8-16 x 3/4” Socket Head Cap Screw *(Four Required)*
19	10105567	2” Base, Through Hardened *(For use with 10105573)*
20	1014241	3/8” Washer *(Four Required)*
21	10105569	3/8–16 x 3-3/4" Bolt *(Four Required)*
22	1011901	1" Square Pipe Plug
—	1014244	Repair Kit with Urethane Sleeve *(Includes Item #'s: 8,10,13 and 14)*
—	1014222	Soft Seal Kit *(Includes Item #'s: 8,13, and 14)*
—	1091045	Hazard Identification Tag

Figure 19: Marco® Maxum III Abrasive Metering Valve — Urethane Sleeve — 2”

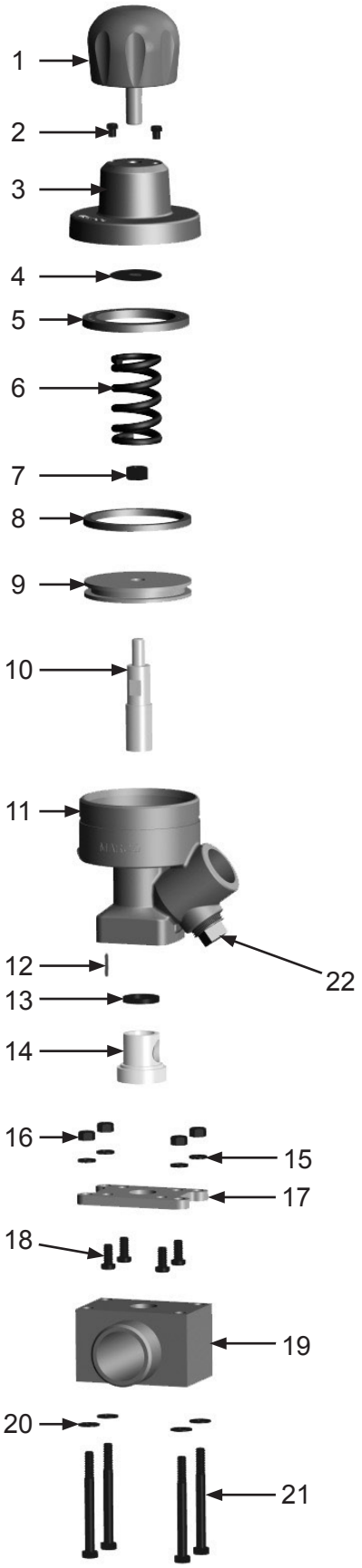

PART NUMBERS AND SCHEMATICS

Marco® 130P Remote Control System

Item #	Part #	Description
Fig. 20		
—	**10103834**	**Marco® 130P Remote Control System — Complete**
1	10WS	Watts Strainer
2	1012326	1/4" Swivel 90° Fitting *(Three Required)*
3	1013600	1-1/2” NPT High-flow GateKeeper Air Valve *(See Figure 20)*
4	1011844	1/4" NPT Pipe Tee *(Two Required)*
5	10PAF025	1/4" Push-On Hose Fitting *(Five Required)*
6	10AH025	1/4" Push-On Air Hose *(Per Foot)*
7	10PAF0125	1/8" Push-On Air Hose Fitting
8	1014239	1/8" 90° Swivel Fitting *(Two Required)*
9	1015200	Marco® 152P Remote Control Switch
10	1016000	55 ft. of Pneumatic Control Line with 1/4" & 1/8" Male and Female Fittings
11	1017019	1/4" x 1/4" Hex Nipple *(Three Required)*
12	10SME025	1/4" Straight Swivel
13	1019000	190 Pneumatic Solenoid *(See Figure 31)*
14	10DE025	1/4" NPT Dust Eliminator
15	1011824	1/4" Street Elbow
16	1019044	1/4-20 x 1-3/4” Zinc Bolt *(Two Required)*
17	1012323	1/4-20 Zinc Lock Nut with Nylon *(Two Required)*
—	1091045	Hazard Identification Tag

Figure 20: Marco® 130P Remote Control System

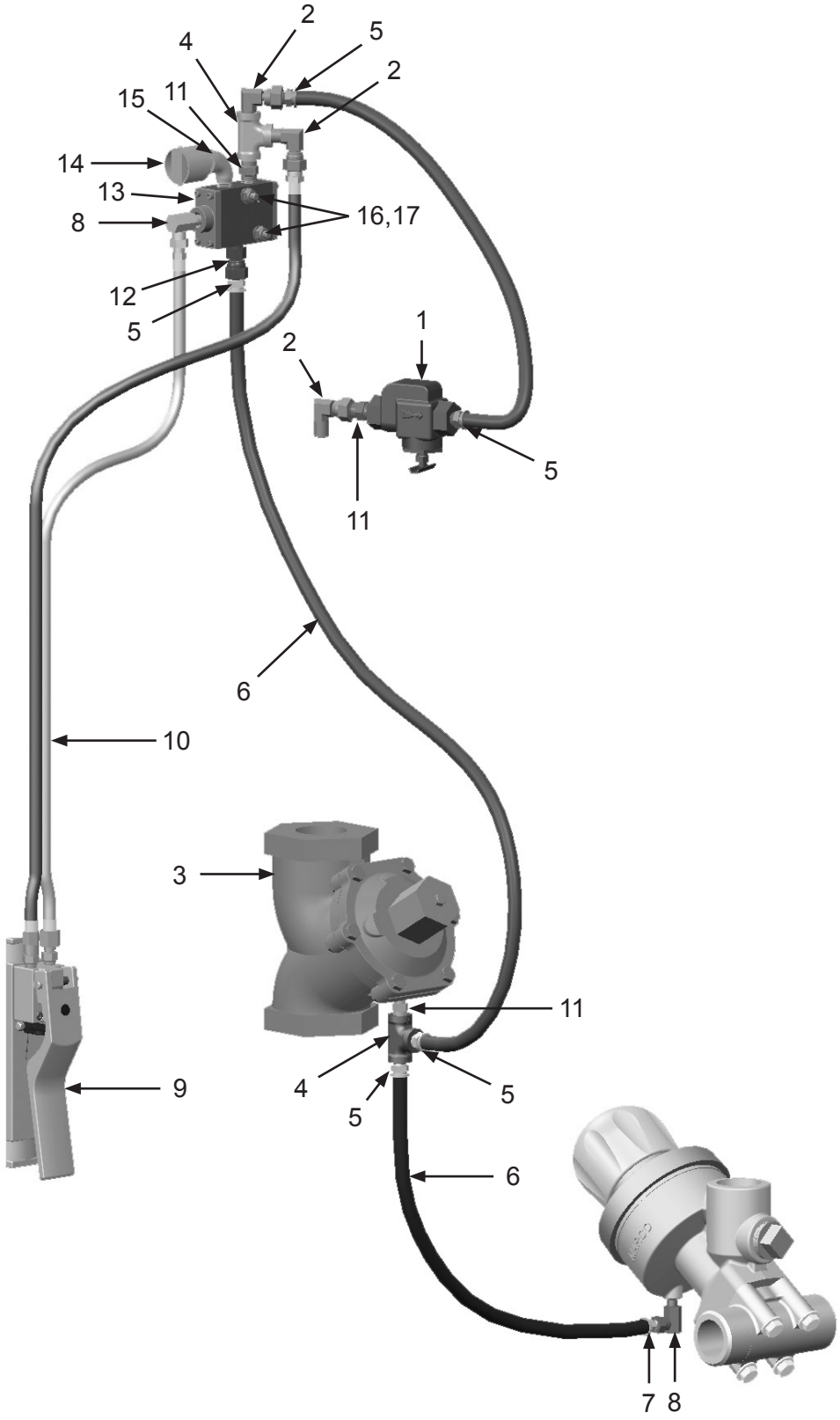

1-1/2” NPT High-flow GateKeeper Air Valve

Item #	Part #	Description
Fig. 21		
—	**1013600**	**1-1/2” NPT High-flow GateKeeper Air Valve**
1	1013322	Spring Retainer
2	1013326	O-ring
3	1013312	Cap
4	1013323	Spring
5	1013313	Lock Nut
6	1013315	Diaphragm Plate *(Two Required)*
7	1013303	Diaphragm
8	1013305	Retainer Bushing
9	1013306	O-ring
10	1013318	Shaft
11	1013302	Gasket *(Two Required)*
12	1013320	Disc
13	1013311	Lock Nut
13	1013309	Seat
14	1013328	Body
15	1013316	Nut *(Six Required)*
16	1013308	Seat O-Ring
17	1013310	Disc Plate
18	1013327	Brass Washer
19	1013307	Disc Retainer
20	1013304	O-ring
21	1013314	Cap Screw *(Six Required)*
22	1012905	1/8" Breather Muffler
A	1091050	Sticker - Air Outlet
B	1091051	Sticker - Air Inlet
—	1013301	1-1/2” NPT High-flow GateKeeper Air Valve Service Kit *(Includes Item #'s: 5, 7, 9, 11, 12, 17, and 20)*

Figure 21: 1-1/2” NPT High-flow GateKeeper Air Valve

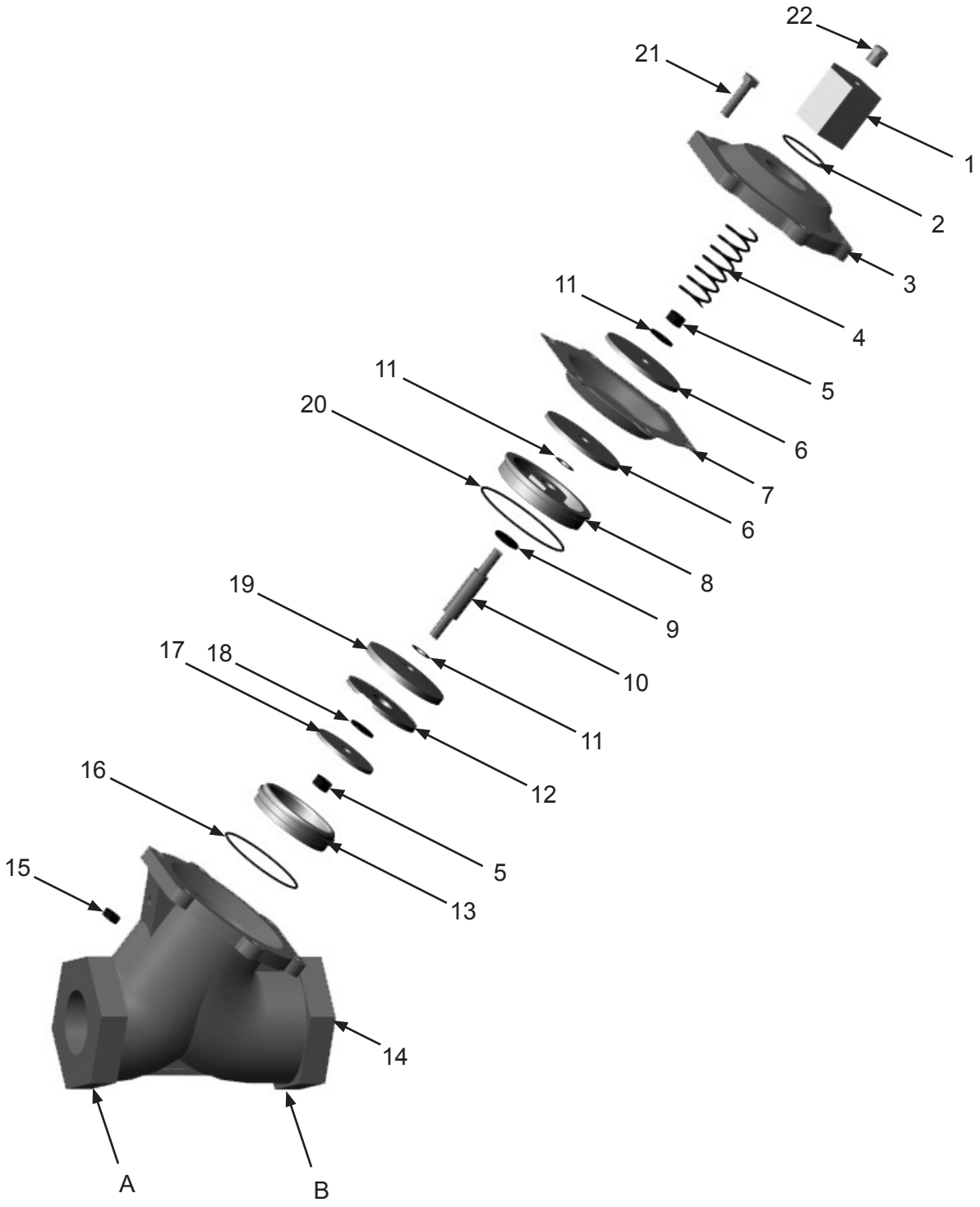

12-Volt DC Marco® 130E Remote Control System

Item #	Part #	Description
Fig. 22		
—	**10103835**	**12-Volt DC Marco® 130E Remote Control System – Complete**
1	1012326	1/4” NPT Swivel 90° Fitting *(Two Required)*
2	10WS	Watts Strainer
3	1017019	1/4” NPT Hex Nipple *(Two Required)*
4	10SME025	1/4" Straight Swivel
5	10PAF025	1/4” NPT x 1/4" Barb Push-On Hose Fitting *(Five Required)*
6	10AH025	1/4” Push-On Air Hose *(Per Foot)*
7	1013600	1-1/2” NPT High-flow GateKeeper Air Valve *(See Figure 21)*
8	1011844	1/4” NPT Pipe Tee
9	10PAF0125	1/8” NPT x 1/4" Barb Push-On Air Hose Fitting
10	1014239	1/8” 90° Swivel Fitting
11	1015100	Marco® 151E Remote Control Switch
12	1030718	Battery Clamps – pair
13	1015540	16/2 Power Cord *(Per Foot)*
14	1015555	3-prong Twist-Lock Plug – Male
15	1015556	3-prong Twist-Lock Plug – Female
16	1015545	50' of 16/2 Power Cord with 3-prong Twist-Lock Plugs *(Includes Item #'s: 15, 16, and 14 (Quantity of 50 Feet))*
17	1015544	Battery Clamp Kit with 3-prong Twist-Lock Plug Installed *(Includes Item #'s: 13, 16, and 14 (Quantity of Two Feet))*
18	1015546	16/2 SJ Power Cord with 3-prong Twist-Lock Plugs Installed *(Includes Item #'s: 15, 16, and 14 (Quantity of 25 Feet))*
19	1019051	12-Volt DC 190 Electric Control Assembly *(See Figure 26)*
20	1019044	1/4-20 x 1-3/4” Zinc Bolt *(Two Required)*
21	1012323	1/4-20 Zinc Lock Nut with Nylon *(Two Required)*
—	1091045	Hazard Identification Tag

Figure 22: 12-Volt DC Marco® 130E Remote Control System

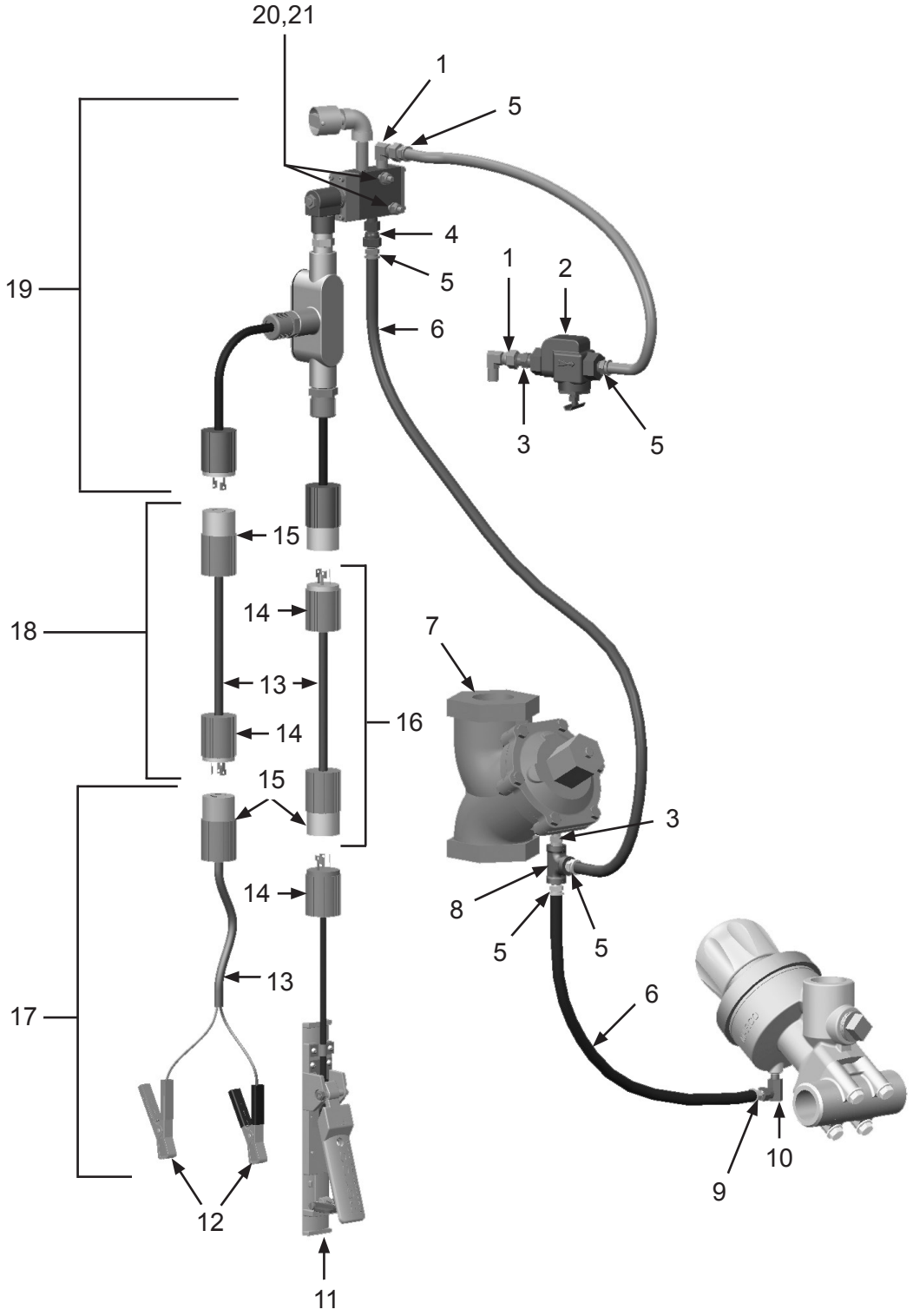

120-Volt AC Marco® 130E Remote Control System

Item #	Part #	Description
Fig. 23		
—	**10103836**	**120-Volt AC Marco® 130E Remote Control System – Single Outlet – Complete**
1	1012326	1/4” NPT Swivel 90° Fitting *(Two Required)*
2	10WS	Watts Strainer
3	1017019	1/4” NPT Hex Nipple *(Two Required)*
4	10SME025	1/4" Straight Swivel
5	10PAF025	1/4” NPT x 1/4" Barb Push-On Hose Fitting *(Five Required)*
6	10AH025	1/4” Push-On Air Hose *(Per Foot)*
7	1013600	1-1/2” NPT High-flow GateKeeper Air Valve *(See Figure 21)*
8	1011844	1/4” NPT Pipe Tee
9	10PAF0125	1/8” NPT x 1/4" Barb Push-On Air Hose Fitting
10	1014239	1/8” 90° Swivel Fitting
11	1015100	Marco® 151E Remote Control Switch
12	1015555	3-Prong Twist-Lock Plug – Male *(Two Required)*
13	1015556	3-Prong Twist-Lock Plug – Female
14	1015540	16/2 Power Cord *(Per Foot)*
15	1015545	50' of 16/2 Power Cord with 3-prong Twist-Lock Plugs Installed *(Includes Item #'s: 13,14, and 15 (Quantity of 50 Feet))*
16	1030026	120-Volt 3-prong Standard Male Plug
17	10100713	3 Amp 120-Volt AC to 12-Volt AC Power Converter *(Includes Item #'s: 14 and 17)*
18	1019052	12-Volt DC 190 Electric Control Assembly *(See Figure 30)*
19	1019044	1/4-20 x 1-3/4” Zinc Bolt *(Two Required)*
20	1012323	1/4-20 Zinc Lock Nut with Nylon *(Two Required)*
—	1091045	Hazard Identification Tag

Figure 23: 120-Volt AC Marco® 130E Remote Control System

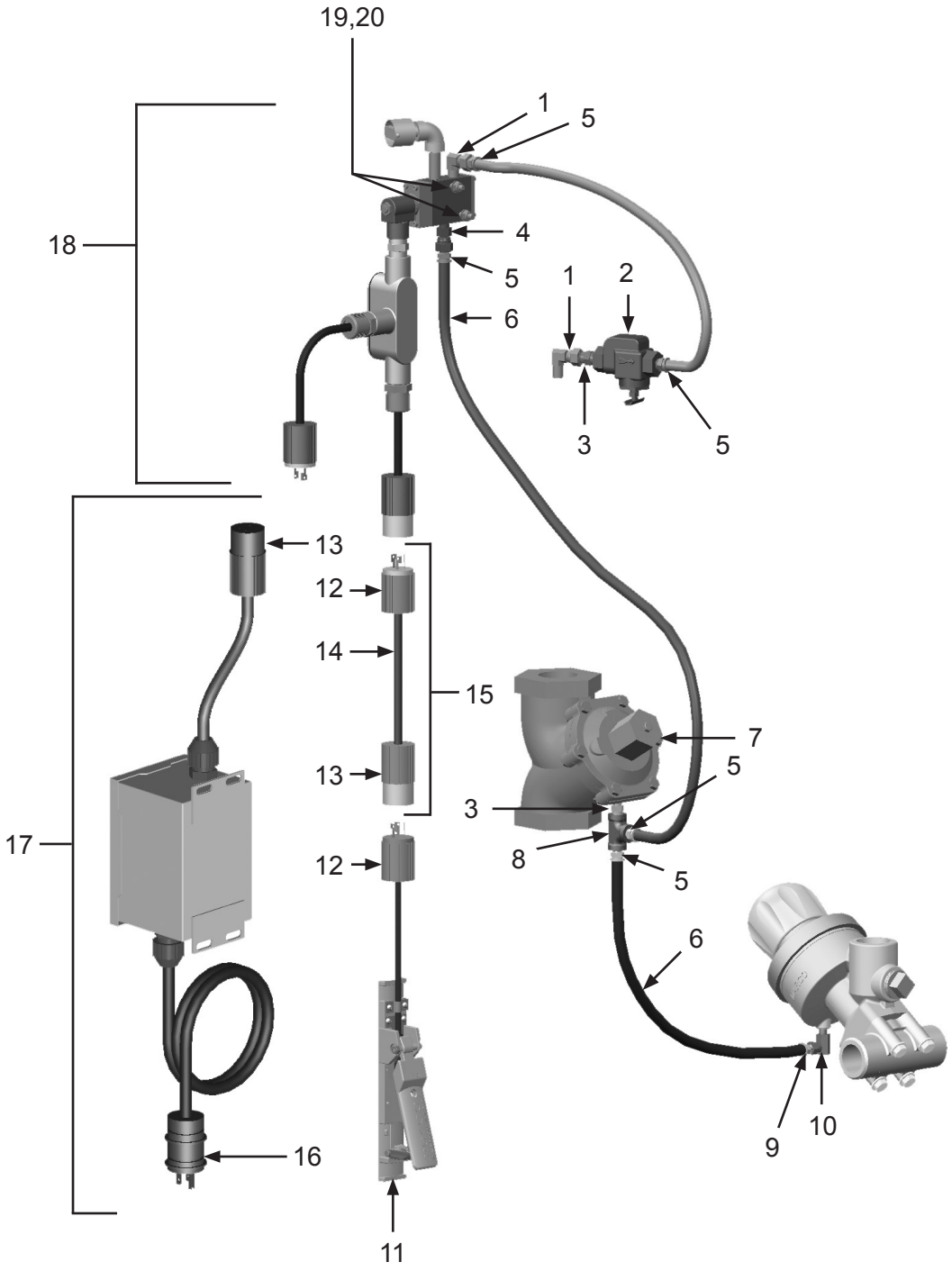

PART NUMBERS AND SCHEMATICS

120-Volt AC Marco® 130E Remote Control System - Multiple Outlet

Item #	Part #	Description
Fig. 24		
—	**10103870**	**120-Volt AC Marco® 130E Remote Control System – 2-Outlet Complete**
—	**10103871**	**120-Volt AC Marco® 130E Remote Control System – 3-Outlet Complete**
—	**10103872**	**120-Volt AC Marco® 130E Remote Control System – 4-Outlet Complete**
1	1012326	1/4” NPT Swivel 90° Fitting *(Two Required)*
2	10WS	Watts Strainer
3	1017019	1/4” NPT Hex Nipple *(Two Required)*
4	10SME025	1/4" Straight Swivel
5	10PAF025	1/4” NPT x 1/4" Barb Push-On Hose Fitting *(Five Required)*
6	10AH025	1/4” Push-On Air Hose *(Per Foot)*
7	1013600	1-1/2” NPT High-flow GateKeeper Air Valve *(See Figure 21)*
8	1011844	1/4” NPT Pipe Tee
9	10PAF0125	1/8” NPT x 1/4" Barb Push-On Air Hose Fitting
10	1014239	1/8” 90° Swivel Fitting
11	1015100	Marco® 151E Remote Control Switch
12	1015555	3-Prong Twist-Lock Plug – Male *(Two Required)*
13	1015556	3-Prong Twist-Lock Plug – Female
14	1015540	16/2 Power Cord *(Per Foot)*
15	1015545	50' of 16/2 Power Cord with 3-prong Twist-Lock Plugs Installed *(Includes Item #'s: 13,14, and 15 (Quantity of 50 Feet))*
16	1030026	120-Volt 3-prong Standard Male Plug
17	10100713	3 Amp 120-Volt AC to 12-Volt AC Power Converter *(Includes Item #'s: 14 and 17)*
18	1019052	12-Volt DC 190 Electric Control Assembly *(See Figure 30)*
19	1019044	1/4-20 x 1-3/4” Zinc Bolt *(Two Required)*
20	1012323	1/4-20 Zinc Lock Nut with Nylon *(Two Required)*
—	1091045	Hazard Identification Tag

Figure 24: 120-Volt AC Marco® 130E Remote Control System - Multiple Outlet

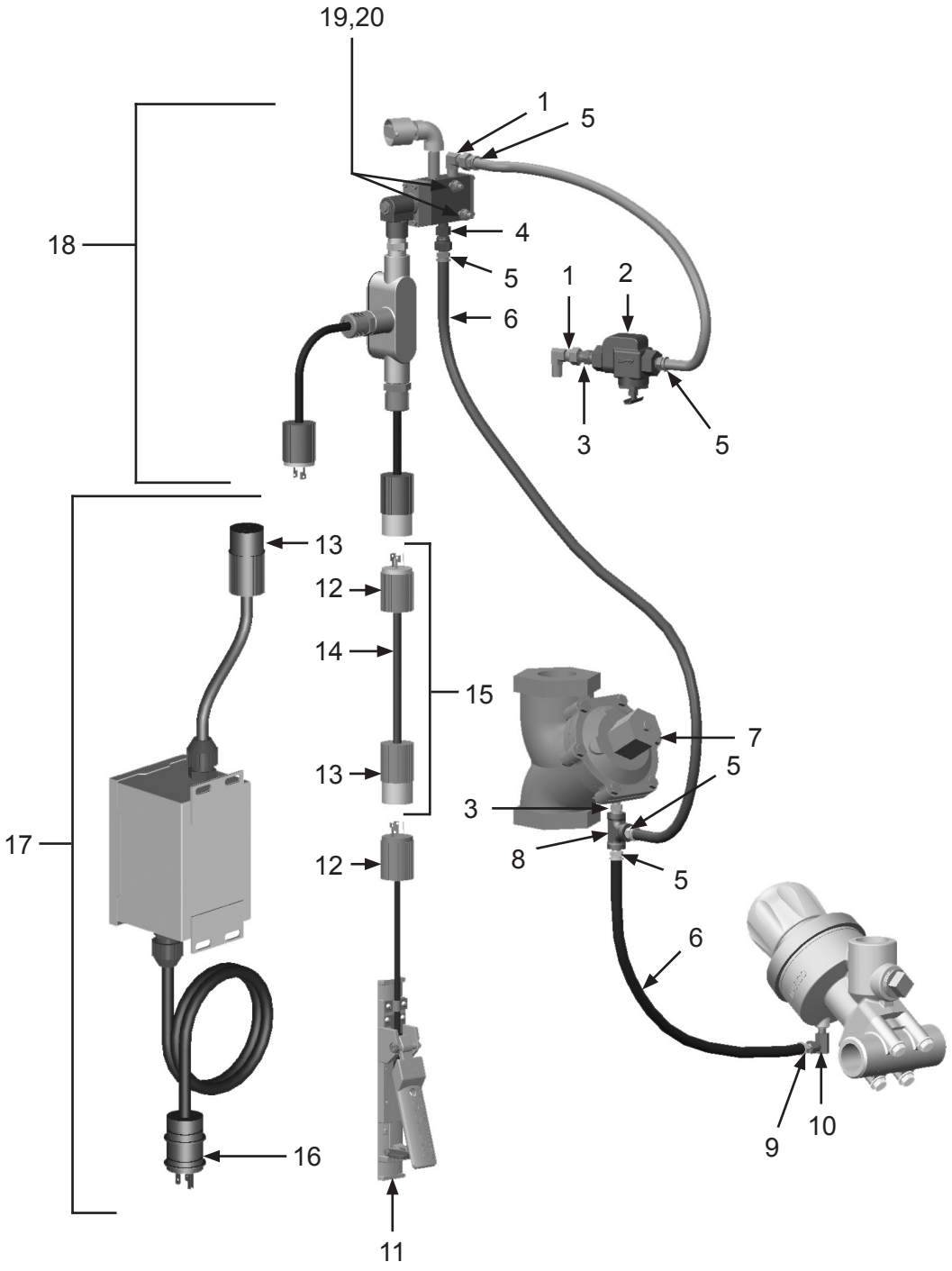

Figure 25: Marco® 123P Remote Control System

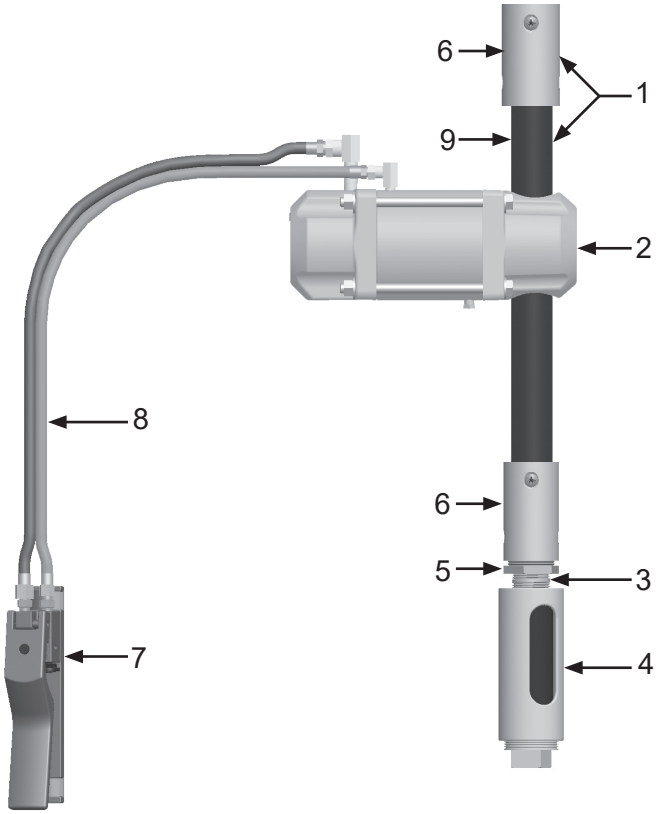

Item #	Part #	Description
Fig. 25		
—	**1012351**	**Marco® 123P Remote Control System – Complete**
1	1012350	Blowdown Hose Assembly *(Includes Item #'s: 6 and 9 (Quantity of Two Feet))*
2	1012300	Tandem Remote Control Valve – Complete *(See Figure 26)*
3	1012151	1" Close Nipple
4	1011100	Marco® Exhaust Muffler *(See Figure 15)*
5	1012157	1-1/4" x 1" Bushing
6	10NHA1	1-1/4" Aluminum Nozzle Holder
7	1015200	Marco® 152P Remote Control Switch
8	1016000	55 Feet of Coupled Control Line with 1/4" and 1/8" Fittings
9	10BH0342BR	3/4" I.D. Abrasive Blasting Hose *(sold per foot)*
—	106M007	Part Numbers & Schematics Guide – Marco® 123P Remote Control System
—	106M068	Part Numbers & Schematics Guide – Marco® 152P Remote Control Switch
—	1090007	Operator's Manual – Marco® 123P Remote Control System
—	1090068	Operator's Manual – Marco® 152 Remote Control Switch

Figure 26: Tandem Remote Control Valve

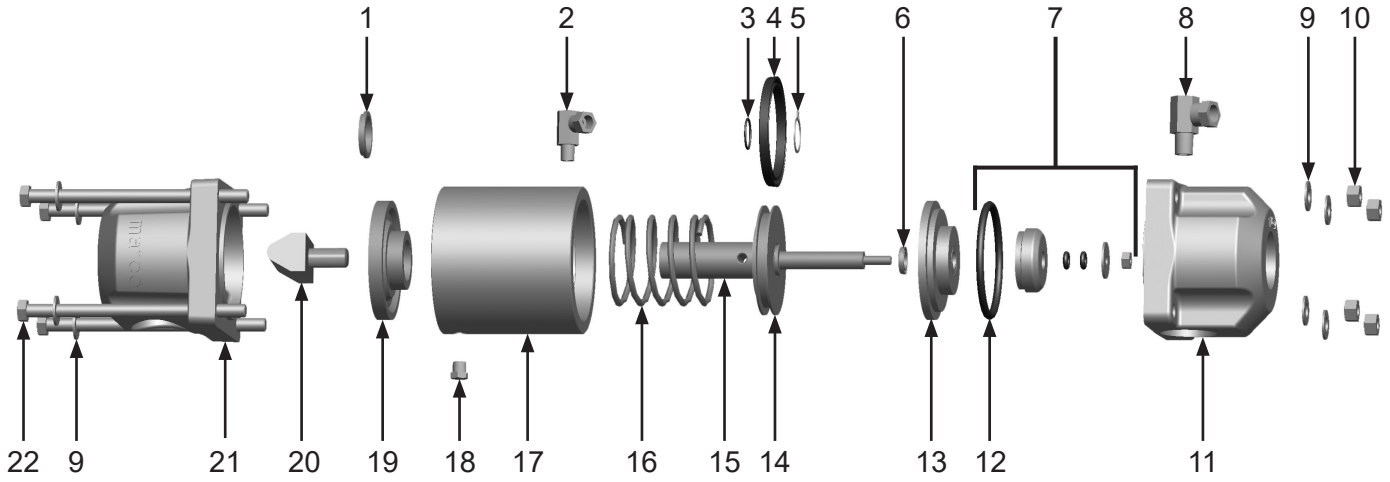

Item #	Part #	Description
Fig. 26		
—	**1012300**	**Tandem Remote Control Valve**
1	1012308	Seal – Upper Rod Guide
2	1014239	1/8" 90° Swivel Fitting
3	1012312	O-ring – Shaft
4	1012317	Seal – Piston
5	1012313	13/16" External Snap Ring
6	1012314	Seal – Lower Rod Guide
7	1012322	Valve Plug Assembly *(Includes Item #12)*
8	1012326	1/4" 90° Swivel Fitting
9	1014241	3/8" Washer *(Eight Required)*
10	1012318	3/8-16 Nut *(Four Required)*
11	1012321	Base
12	1012320	O-ring – Lower Rod Guide
13	1012319	Lower Rod Guide
14	1012315	Piston
15	1012316	Shaft
16	1012309	Spring
17	1012311	Cylinder
18	1012905	1/8" Breather Muffler
19	1012307	Upper Rod Guide
20	1012306	Pinch Ram
21	1012305	Cap
22	1012310	3/8-16 x 6" Bolt *(Four Required)*
—	1012301	Tandem Remote Control Valve Repair Kit *(Includes Item #'s: 1, 3–7, and 12)*
—	1091072	Hazard Identification Tag

PART NUMBERS AND SCHEMATICS

12-Volt DC Marco® 123E Remote Control System

Item #	Part #	Description
Fig. 27		
—	**1012352**	**12-Volt DC Marco® 123E Remote Control System – Complete**
1	1012326	1/4" 90° Swivel Fitting *(Two Required)*
2	10PAF025	1/4" NPT x 1/4" Barb Push-on Air Hose Fitting *(Three Required)*
3	10AH025	1/4" I.D. Push-on Air Hose *(Six Feet Required)*
4	10WS	Watts Strainer
5	1017019	1/4" Hex Nipple
6	10PAF0125	1/8" NPT x 1/4" Barb Push-on Air Hose Fitting
7	10BH0342BR	3/4" I.D. Abrasive Blasting Hose *(Per Foot)*
8	10NHA1	1-1/4" Aluminum Nozzle Holder *(Two Required)*
9	1012350	Blowdown Hose Assembly *(Includes Item #'s: 7 (Quantity of Two Feet) and 8)*
10	1012300	Tandem Remote Control Valve – Complete *(See Figure 26)*
11	1012151	1" Close Nipple
12	1011100	Marco® Exhaust Muffler *(See Figure 15)*
13	1012157	1-1/4" x 1" Bushing
14	10SME025	1/4" Straight Swivel Fitting
15	1015545	50 Feet of Control Line with Male and Female 3-prong Twist-Lock Plugs *(Includes Item #'s: 16, 20 (Quantity of 50 Feet), and 21)*
16	1015555	3-prong Twist-Lock Plug – Male
17	1015100	Marco® 151E Remote Control Switch - Complete
18	1030718	Battery Clamp (Pair)
19	1015540	16/2 Power Cord *(Per Foot)*
20	1015556	3-prong Twist Lock Plug – Female
21	1019051	12-Volt DC 190 Electric Control System *(See Figure 28)*
22	1015546	25 Feet of Power Cord with Male and Female 3-prong Twist-Lock Plugs *(Includes Item #'s: 16, 20 (Quantity of 25 Feet), and 21)*
23	1015544	Battery Clamp Kit *(Includes Item #'s: 18, 19 (Quantity of Two Feet), and 20)*
—	106M063	Part Numbers & Schematics Guide – Marco® 151E Remote Control Switch
—	106M089	Part Numbers & Schematics Guide – Marco® 123E Remote Control System
—	1090063	Operator's Manual – Marco® 151E Remote Control Switch
—	1090089	Operator's Manual – Marco® 123E Remote Control System

Figure 27: 12-Volt DC Marco® 123E Remote Control System

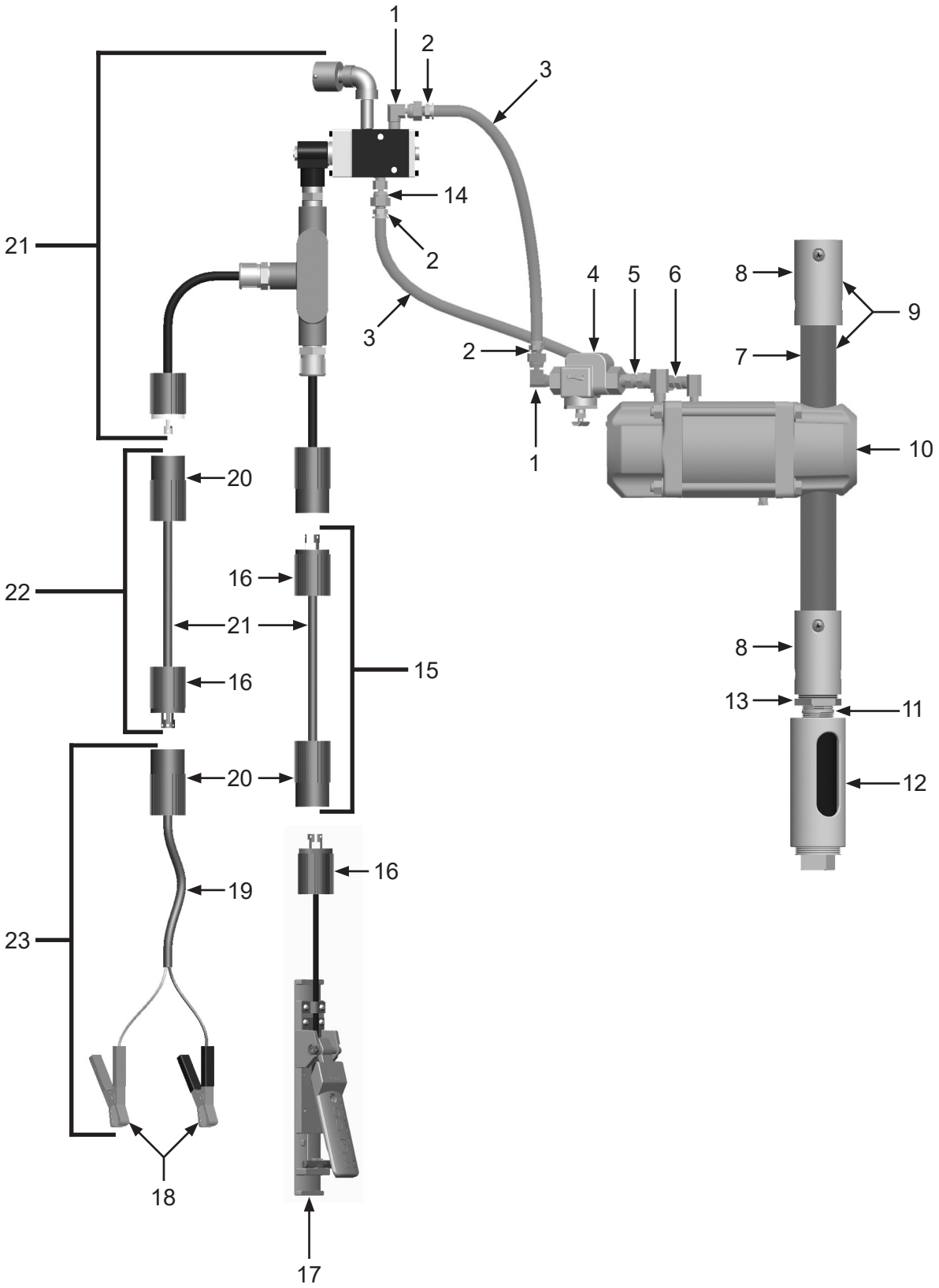

Figure 28: 12-Volt DC 190 Electric Control Assembly

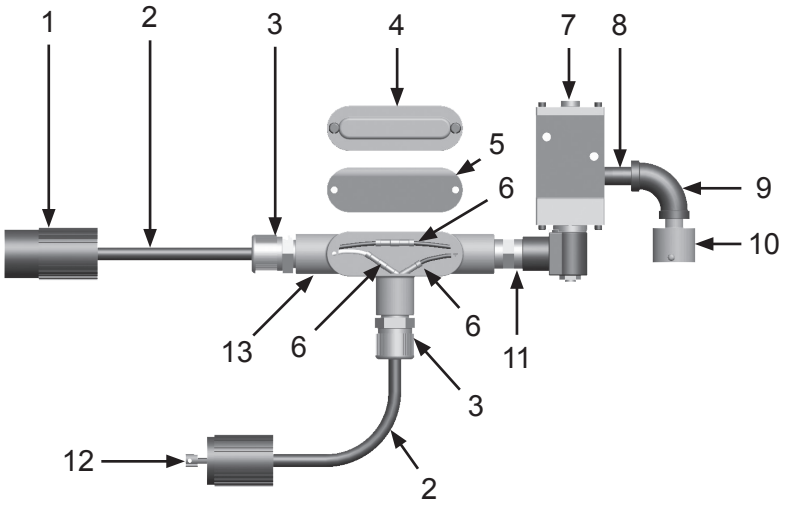

Item #	Part #	Description
Fig. 28		
—	**1019051**	**12-Volt DC 190 Electric Control Assembly – Complete**
1	1015556	3-Prong Twist-Lock Plug – Female
2	1015540	16/2 Power Cord – Per Foot
3	1019021	Cord Grip *(Two Required)*
4	1019022	Conduit Box Cover
5	1019023	Conduit Box Cover Gasket
6	1030028	Butt Splicer *(Four Required)*
7	1019010	12-Volt DC Electric Solenoid – Complete
8	1011217	1/4" x 2" Pipe Nipple
9	1011832	1/4" NPT 90° Pipe Nipple
10	10DE025	Dust Eliminator
11	20100677	1/2" x 1/2" NPT Hex Nipple
12	1015555	3-Prong Twist-Lock Plug – Male
13	1019020	1/2" Tee Conduit Box

Figure 29: 12-Volt DC 190 Electric Solenoid

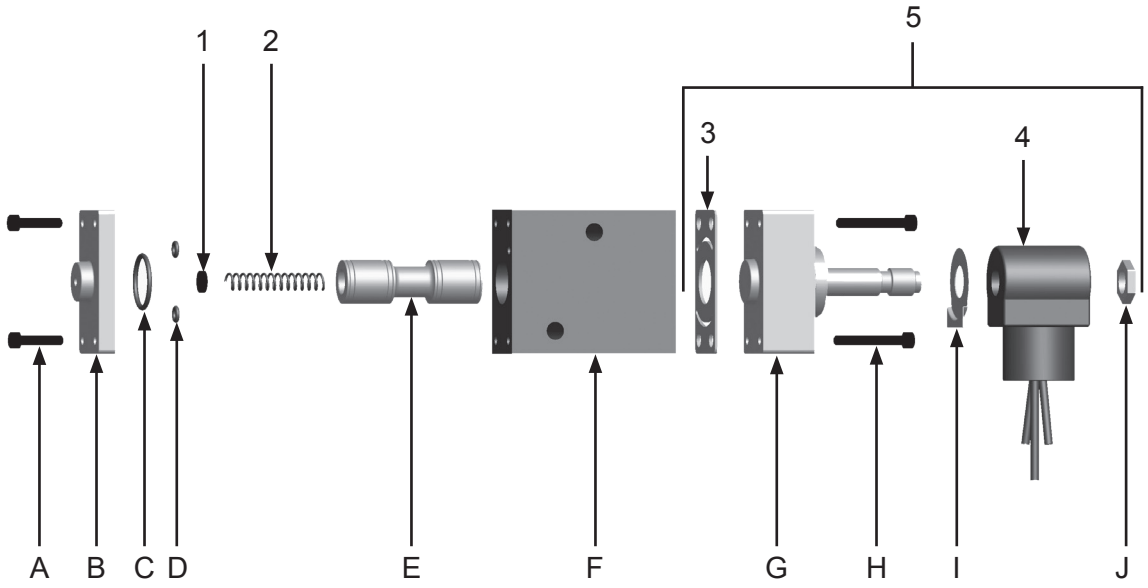

Item #	Part #	Description
Fig. 29		
—	**1019010**	**12-Volt DC 190 Electric Solenoid — Normally-closed — Complete**
1	1019029	Felt Filter
2	1019032	Spring
3	1019033	Gasket
4	1019039	12-Volt DC Coil
5	1019034	12-Volt DC Operator Assembly *(Includes Items: #3, #4, G, H, I, and J)*
—	1019030	Electric Solenoid Repair Kit *(Includes Items: #1, #2, #3, C, D, and E)*

** Items A–J are not available individually*

Figure 30: 12-Volt AC 190 Electric Control Assembly

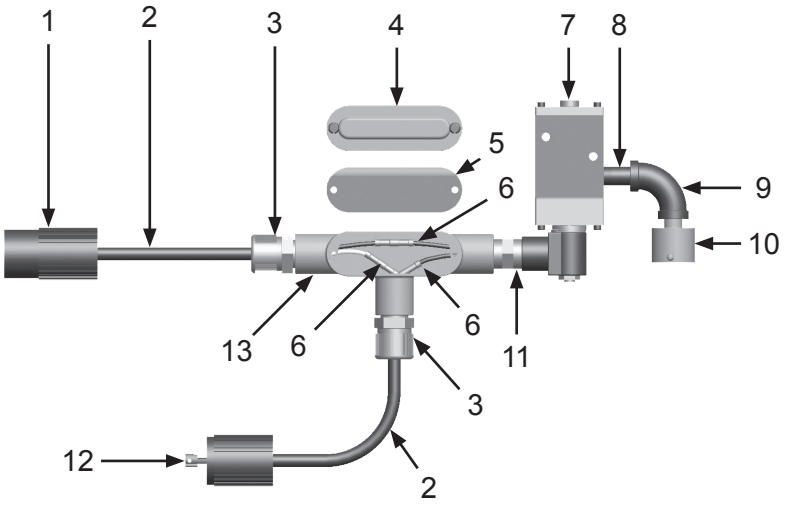

Item #	Part #	Description
Fig. 30		
—	**1019052**	**12-Volt AC 190 Electric Control Assembly – Complete**
1	1015556	3-Prong Twist-Lock Plug – Female
2	1015540	16/2 Power Cord – Per Foot
3	1019021	Cord Grip *(Two Required)*
4	1019022	Conduit Box Cover
5	1019023	Conduit Box Cover Gasket
6	1030028	Butt Splicer *(Four Required)*
7	1019011	12-Volt AC Electric Solenoid – Complete
8	1011217	1/4" x 2" Pipe Nipple
9	1011832	1/4" NPT 90° Pipe Nipple
10	10DE025	Dust Eliminator
11	20100677	1/2" x 1/2" NPT Hex Nipple
12	1015555	3-Prong Twist-Lock Plug – Male
13	1019020	1/2" Tee Conduit Box

Figure 31 12-Volt AC 190 Electric Solenoid

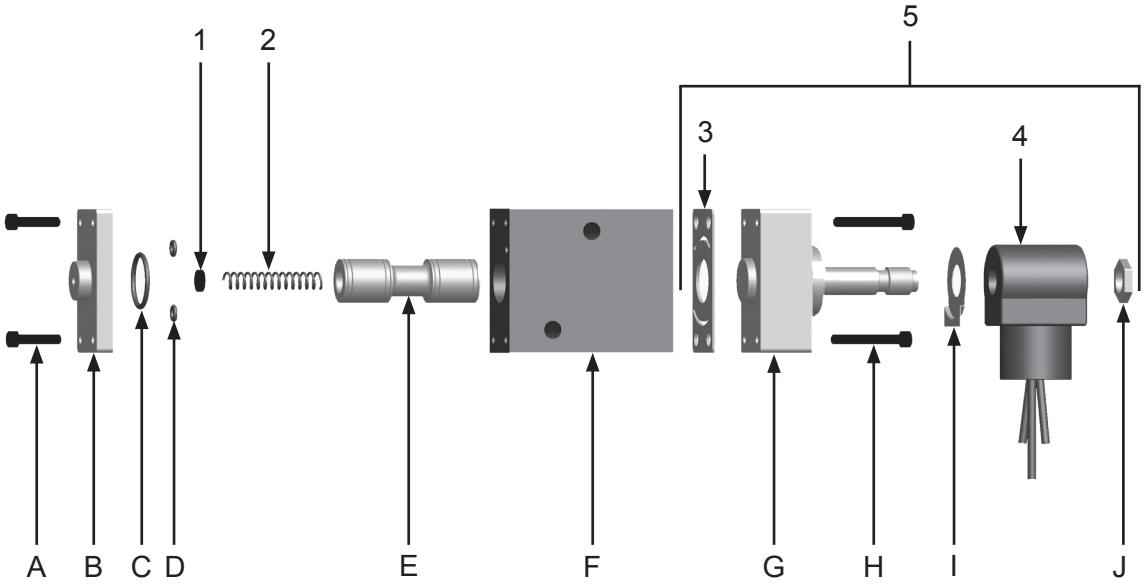

Item #	Part #	Description
Fig. 31		
—	**1019011**	**12-Volt AC 190 Electric Solenoid – Complete**
1	1019029	Felt Filter
2	1019032	Spring
3	1019033	Gasket
4	1019040	12-Volt AC Coil
5	1019035	12-Volt AC Electric Operator Assembly *(Includes Items: #3, #4, G, H, I, and J)*
—	1019030	12-Volt AC Electric Solenoid Repair Kit *(Includes Items: #1, #2, #3, C, D, and E)*
** Items A–J are not available individually*		

Figure 32: Marco® 120-Volt AC to 12-Volt AC Power Converter

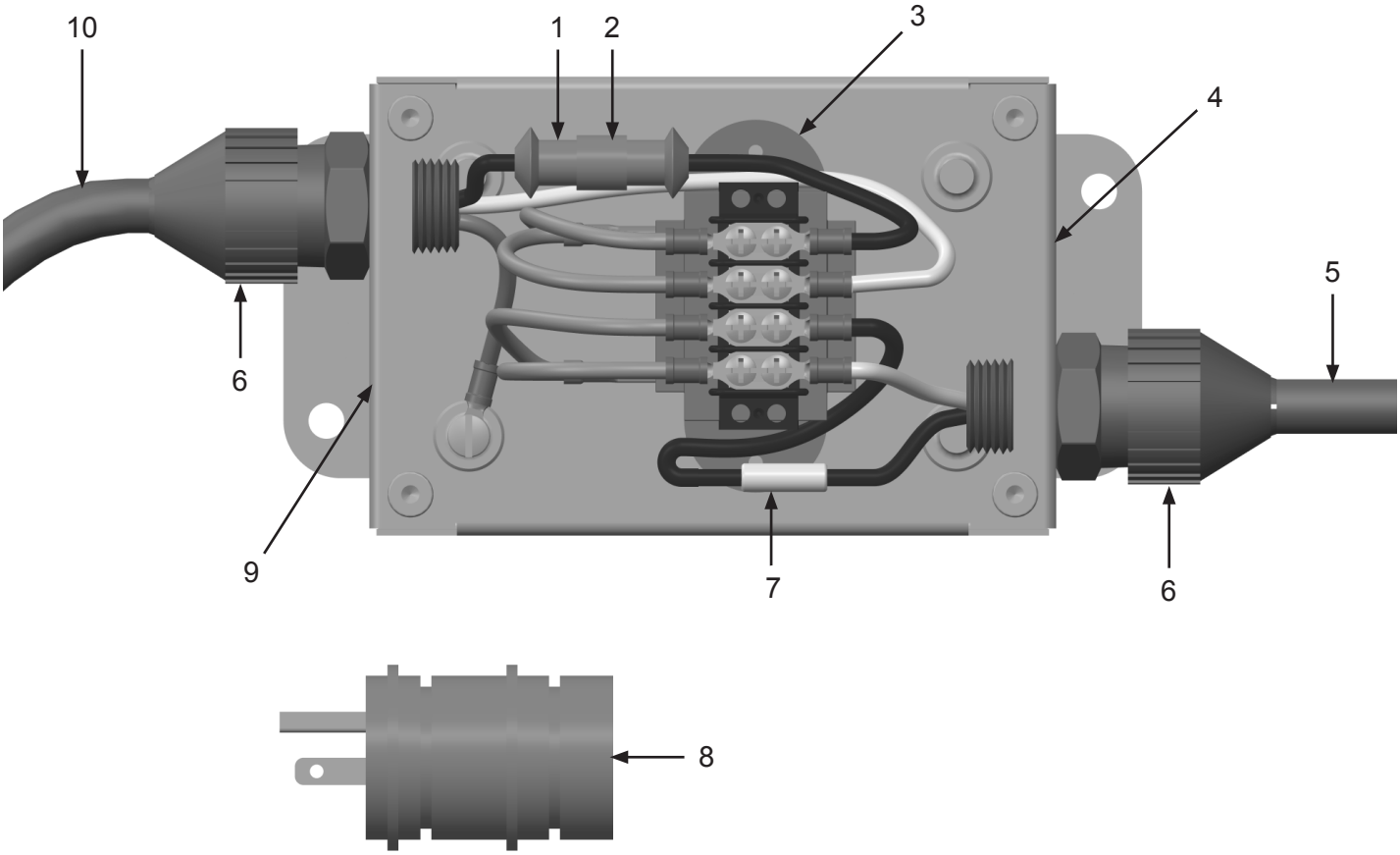

Item #	Part #	Description
Fig. 32		
—	**1030020**	**Marco® 120-Volt AC to 12-Volt AC Power Converter with 3 feet of 14/2 Electric Cord and Plug – Complete**
1	1030123	3 Amp Fuse
2	1030023	In-Line Fuse Holder
3	1030022	Transformer – Marco 120-Volt AC to 12-Volt AC Power Converter
4	1091067	Power-Out Decal *(Not Shown)*
5	1030013	14/2 SEOW Electric Cord *(Per Foot)*
6	1030025	Strain Relief *(Two Required)*
7	1030021	Resistor
8	1030026	3-prong, 120-Volt AC Plug – Male
9	1092014	Power-In Decal *(Not Shown)*
10	1015550	14/3 SEOW Electric Cord *(Per Foot)*
—	1091063	Hazard Identification Decal

Figure 33: 190 Pneumatic Solenoid

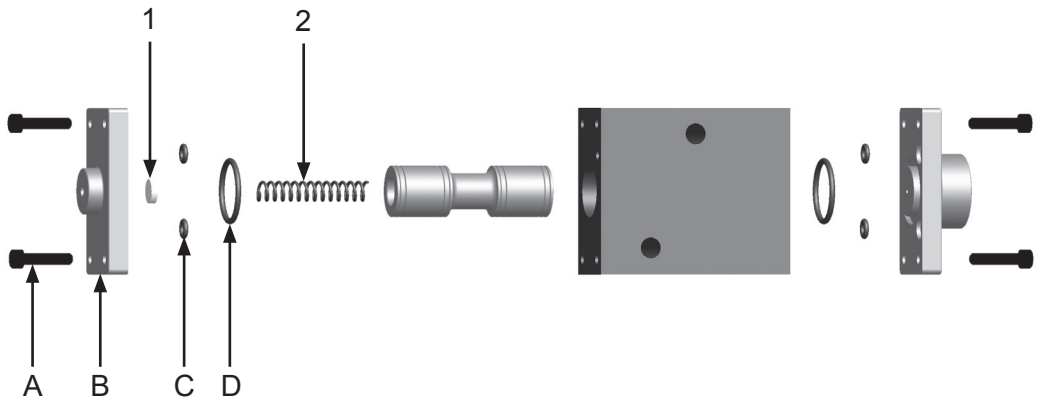

Item #	Part #	Description
Fig. 33		
—	**1019000**	**190 Pneumatic Solenoid Normally—Closed — Complete**
1	1019029	Felt Filter
2	1019032	Spring
3	1019027	Pneumatic Solenoid Operator Assembly *(Includes Items: G, H, I, and J)*
4	1019028	Pneumatic Solenoid Repair Kit *(Includes Items: #1, #2, C, D, E, G, and H)*

** Items A–J are not available individually*

OPTIONAL ACCESSORIES

Figure 34: Lids and Screens (Optional)

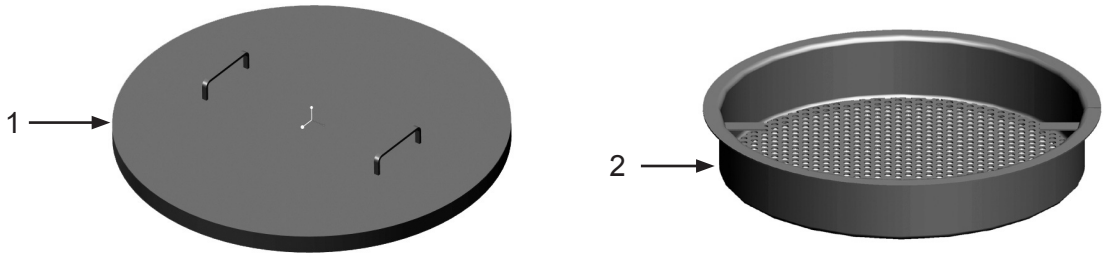

Item #	Part #	Description
Fig. 34		
1	10107501	36" Blast Pot Lid
2	10108290	36" Screen

LITERATURE REFERENCES

Part #	Description
Blast Pot	
106M146	Part Numbers and Schematics Guide – Marco® 20 Cu. Ft. Abrasive Blasting Pots
1090146	Operator's Manual – Marco® 20 Cu. Ft. Abrasive Blasting Pot
Remote Control Switch	
106M068	Part Numbers and Schematics Guide – Marco® 152P Remote Control Switch
1090068	Operator's Manual – Marco® 152P Remote Control Switch
106M087	Part Numbers and Schematics Guide – Marco® 151E Remote Control Switch
1090087	Operator's Manual – Marco® 151E Remote Control Switch

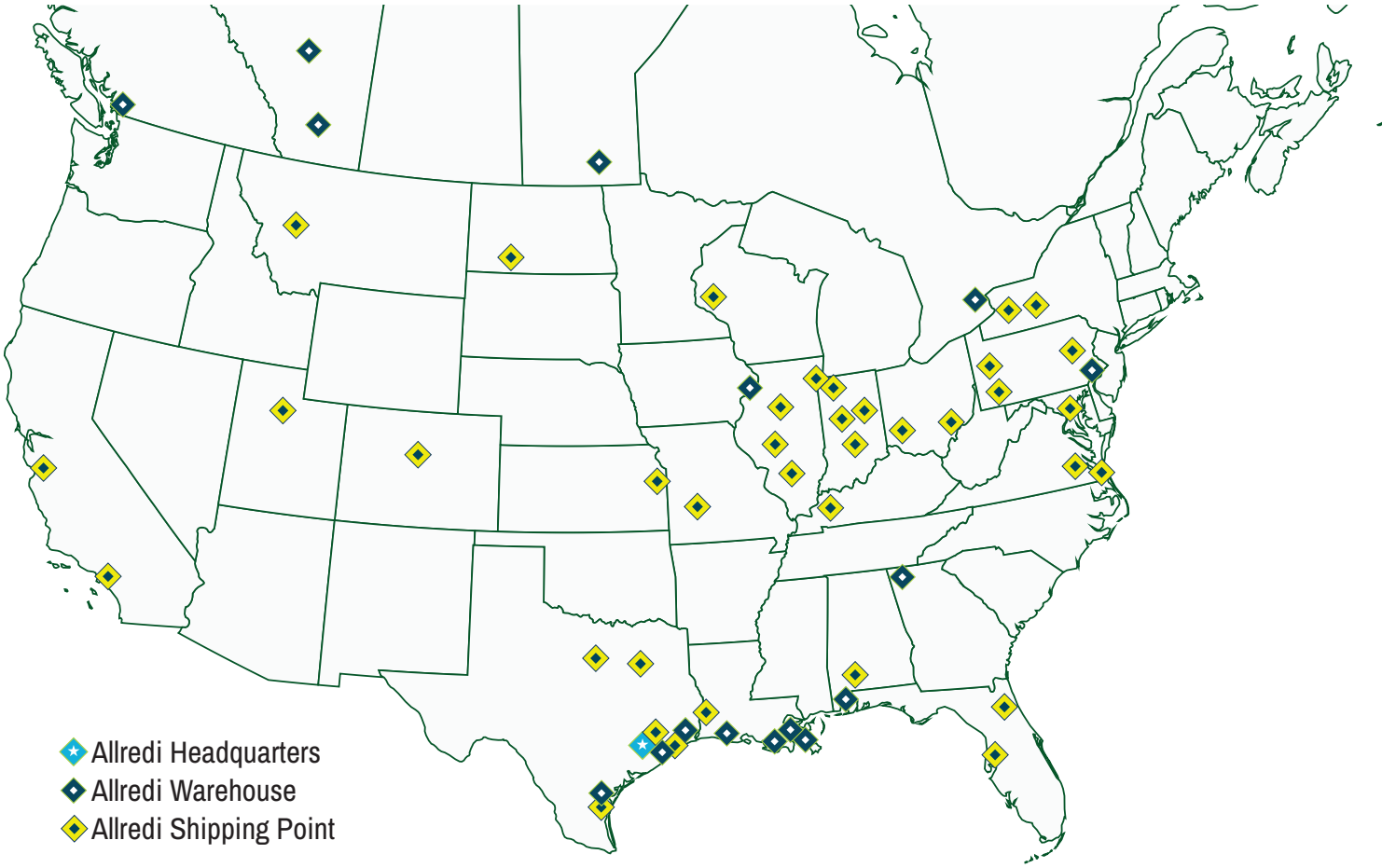

ALLREDI THERE

Serving these industries: Bridge, Pipeline, Tank & Tower, Concrete Services, Rail, Shipyard & Marine, Pools & Fountains, and Foundry

UNITED STATES

Pasadena, TX *(Headquarters)*
844.361.7038

Beaumont, TX
409.722.1284

Bristol, PA
215.826.8080

Corpus Christi, TX
361.887.2038

Davenport, IA
563.324.2519

Deer Park, TX
(Service & Rental Location)
281.930.0905

Duluth, GA
800.535.4564

Gonzales, LA
225.647.7575

Harvey, LA
504.367.8090

Houma, LA
985.580.4273

Lafayette, LA
337.267.1440

Theodore, AL
251.338.7525

CANADA

Calgary, Alberta
403.279.1924

Coquitlam, BC
604.464.6979

Edmonton, Alberta
780.468.2588 (Manus)
780.425.5510 (Mod-U-Blast)

Hamilton, Ontario
905.527.6000 / 888.794.5665

Mississauga, Ontario
905.890.5837

Winnipeg, Manitoba
204.256.3324

WWW.ALLREDI-US.COM / 800.252.7848
WWW.ALLREDI-CA.COM / 800.661.3842

Allredi™ and Marco® are registered trademarks of Allredi, LLC.
Mod-U-Blast® is a registered trademark of Allredi Blast & Abrasives Canada, Inc.
All other brand names or marks are used for identification purposes and are trademarks of their respective owners.

ALLREDI™

Literature #106M146_5/28/2025